EUR AMHS Manual

Appendix E

AMHS Interoperability Tests	
Document Reference:	EUR AMHS Manual, Appendix E
Author:	ICAO AFSG PG
Revision Number:	Version 7.0
Date:	26/04/12
Filename:	EUR_AMHS_Manual-Appx_E-v7_0.doc

Document Control Log

Edition	Date	Comments	section/pages affected
0.1	21/11/2005	Creation of the document.	all
0.2	24/11/2005	Document update including Trilateral Tests	3.2/3.3/4/5/6
0.3	08/01/2006	Editorials, incorporation of PG comments	all
0.4	09/02/2006	Editorials, clarifications, additions	all
0.5	08/03/2006	Editorials, Reformatting of the notes	all
1.0	27/04/2006	Adopted version (AFSG/9)	
1.01	15/07/2006	Editorials, updates, replacements, incorporation of test-cases and test messages	all
1.02	24/07/2006	Incorporation of comments from Mr. J. Fischer	all
1.03	13/10/2006	Incorporation of editorial updates generated during validation between BATSO and DFS	all
1.04	10/01/2007	Incorporation of editorial updates generated by Greece, move of reference overview (former para. 1.4) after the table of contents, revision of figures	all
1.1	13/03/2007	Version for presentation at AFSG/10 for adoption (without revision marks)	all
2.0	26/04/2007	Adopted version (AFSG/10)	
3.0	24/04/2008	Adopted version (AFSG/11) – without changes	
3.1	17/11/2008	Change of references from ICAO Doc 9705 to ICAO Doc 9880 (CP-AMHS-08-006), editorial improvements	all
3.2	09/02/2009	Incorporation of CP-AMHS-09-001	3.4.1, 3.4.2, 3.5.1, 3.5.2
3.3	11/03/2009	Update of the referenced documents	References
4.0	02/04/2009	Adopted version (AFSG/12)	
5.0	17/06/2010	Adopted version (AFSG/14) – without changes	

5.1	25/09/2010	Incorporation of CP-AMHSM-10-001, minor editorial updates	References
5.2	10/03/2011	Incorporation of CP-AMHSM-10-002 and CP-AMHSM-10-003	5.2.2 (IT 802), 7.5, 4.5.5 (IT 505), 6.6, 3.5
6.0	14/04/2011	Adopted version (AFSG/15)	
6.0c	28/04/2011	Adopted version (AFSG/15) corrected due to typo	Table 21 and 24
6.1	03/03/2012	Correction of typos (DR-AMHSM-11-001)	Table 17 and 18
7.0	26/04/2012	Adopted version (AFSG/16)	

Table of contents

1. INTRODUCTION 8

1.1 PURPOSE OF THE DOCUMENT 8
1.2 DOCUMENT STRUCTURE 8
1.3 TEST IDENTIFICATION SCHEME 9

2. AMHS INTEROPERABILITY TEST ENVIRONMENT 10

2.1 APPLICATION INFRASTRUCTURE 10
2.2 TRANSPORT INFRASTRUCTURE 15
2.3 GENERAL PARAMETERS TO BE AGREED 15
2.3.1 Default MTA names and passwords 15
2.3.2 TSAP addresses 15
2.3.3 IP addresses 16
2.3.4 Type and number of associations 16

3. ADDRESSING PLAN FOR AMHS INTEROPERABILITY TESTING 17

3.1 USER ADDRESSES 17
3.2 DL ADDRESSES 19
3.3 AFTN AND X.400 ROUTING TABLES 19
3.3.1 AFTN and X.400 Routing Tables of IUT-A 19
3.3.2 AFTN and X.400 Routing Tables of IUT-B 20
3.3.3 AFTN and X.400 Routing Tables of IUT-C 21
3.4 LOOK-UP TABLE 21
3.4.1 Generic look-up Table for all Implementations Under Test (IUT) (CAAS single "O" type) 21
3.4.2 Generic look-up Table for all Implementations Under Test (IUT) ("XF" type) 22
3.5 LOCAL AMHS USER ADDRESS BOOK 23
3.5.1 Addresses of IUT-A in a local AMHS User address book 23
3.5.2 Addresses of IUT-B in a local AMHS User address book 25
3.5.3 Addresses of IUT-C in a local AMHS User address book 26
3.5.4 Addresses used for loop detection tests 26

4. BILATERAL TEST PROCEDURES 27

4.1 SUBMISSION, TRANSFER AND DELIVERY OPERATION (AMHS TO AMHS) 27
4.1.1 IT101 – Submit, transfer and deliver an IPM (UA IUT-A to UA IUT-B) 27
4.1.2 IT102 – Submit, transfer and deliver an IPM (UA IUT-B to UA IUT-A) 28
4.2 GATEWAY OPERATIONS (AFTN TO AMHS) 29
4.2.1 IT201 – Convert an AFTN message to AMHS format (IUT-A) 29
4.2.2 IT202 – Convert an AFTN message to AMHS format (IUT-B) 30
4.3 GATEWAY OPERATIONS (AMHS TO AFTN) 31
4.3.1 IT301 – Convert an IPM generated by the UA of IUT-A to AFTN format 31
4.3.2 IT302 – Convert an IPM generated by the UA of IUT-B to AFTN format 32
4.4 GATEWAY OPERATIONS (AFTN TO AMHS TO AFTN) 33
4.4.1 IT401 – Convert an AFTN message to AMHS and back to AFTN format 33
4.4.2 IT402 – Convert an AFTN message to AMHS and back to AFTN format 34
4.5 GATEWAY OPERATIONS – SPECIAL CASE SCENARIOS 35
4.5.1 IT501 – Distribute an IPM to AMHS and AFTN users 35
4.5.2 IT502 – Expand a DL addressing both AMHS and AFTN users 36
4.5.3 IT503 – Convert an IPM, if the ATS-message-text contains more than 1800 characters 37
4.5.4 IT504 – Split an incoming IPM addressing more than 21 AFTN users 38
4.5.5 IT505 – Probe Conveyance Test 39
4.6 STRESS TRAFFIC SITUATIONS 40
4.6.1 IT601 – Stress load 40

5. TRILATERAL TEST PROCEDURES - OPTIONAL 41

5.1 SUBMISSION/TRANSFER/DELIVERY AND RELAY OPERATIONS 41
5.1.1 IT701 – Submission /Transfer/Delivery between the partner MTAs 41

5.1.2 IT702 – Relay operations *42*
5.2 TEST OF SPECIAL SITUATIONS 43
5.2.1 IT801 – Alternate MTA routing *43*
5.2.2 IT802– Loop detection *43*

6. BILATERAL TEST PROCEDURES – TEST SCENARIOS 45

6.1 INTRODUCTION 45
6.2 SUBMISSION, TRANSFER AND DELIVERY OPERATION (AMHS TO AMHS) 46
6.3 GATEWAY OPERATIONS (AFTN TO AMHS) 56
6.4 GATEWAY OPERATIONS (AMHS TO AFTN) 66
6.5 GATEWAY OPERATIONS (AFTN TO AMHS TO AFTN) 76
6.6 GATEWAY OPERATIONS – SPECIAL CASES 86
6.7 STRESS TRAFFIC SITUATIONS 104

7. TRILATERAL TEST PROCEDURES - OPTIONAL 108

7.1 SUBMISSION/TRANSFER/DELIVERY AND RELAY OPERATIONS 108
7.2 TEST OF SPECIAL SITUATIONS 114

8. TEST MESSAGE TEMPLATES 126

8.1 TEST MESSAGE TEMPLATES FOR IUT-A 126
8.1.1 Input device User Agent (UA): IUTAMHSA *126*
8.1.2 Input device AFTN Terminal: IUTAFTNA *128*
8.2 TEST MESSAGE TEMPLATES FOR IUT-B 129
8.2.1 Input device User Agent (UA): IUTBMHSA *129*
8.2.2 Input device AFTN Terminal: IUTBFTNA *131*
8.3 TEST MESSAGE TEMPLATES FOR MULTILATERAL TESTS 132

References

[1] ICAO Annex 10 – Aeronautical Telecommunications, Volume II: Communication Procedures

[2] ICAO Doc 9880-AN/466: Manual on Detailed Technical Specifications for the Aeronautical Telecommunication Network (ATN) using ISO/OSI Standards and Protocols, Part II – Ground-Ground Applications - Air Traffic Services Message Handling Services (ATSMHS), First Edition – 2010

[3] EUR Doc 020, EUR AMHS Manual, Main Part

[4] EUR Doc 020, EUR AMHS Manual, Appendix C, AMHS Testing Requirements

[5] Aeronautical Communications Panel (ACP), Working Group N – Networking, Subgroup N3 – Ground-Ground Applications, Montreal, 12th-13th May 2005 (Third meeting): Introduction of Standardized Addresses for AMHS Testing (Rev.a), Doc-Ref. ACP-WG N/SGb N3-WP/3-3 Rev.a, 24/Apr/2005

[6] First Multipartite International Realization of ICAO SARPs AMHS Trials (FIRST), Test Plans for Interoperability Testing, Part 1a: Bilateral Basic Tests

[7] First Multipartite International Realization of ICAO SARPs AMHS Trials (FIRST), Test Plans for Interoperability Testing, Part 1b: Bilateral Extended Tests

[8] First Multipartite International Realization of ICAO SARPs AMHS Trials (FIRST), Test Plans for Interoperability Testing, Part 2: Trilateral Network Tests

Table of Figures

FIGURE 1: AMHS INTEROPERABILITY TEST ENVIRONMENT....10
FIGURE 2: UA TO UA (IUT-A TO IUT-B)....11
FIGURE 3: UA TO UA (IUT-B TO IUT-A)....11
FIGURE 4: AFTN TERMINAL TO UA (IUT-A TO IUT-B)....11
FIGURE 5: AFTN TERMINAL TO UA (IUT-B TO IUT-A)....12
FIGURE 6: UA TO AFTN TERMINAL (IUT-A TO IUT-B)....12
FIGURE 7: UA TO AFTN TERMINAL (IUT-B TO IUT-A)....12
FIGURE 8: AFTN TERMINAL TO AFTN TERMINAL (IUT-A TO IUT-B)....13
FIGURE 9: AFTN TERMINAL TO AFTN TERMINAL (IUT-B TO IUT-A)....13
FIGURE 10: "RELAY" OPERATION TESTS....14
FIGURE 11: ALTERNATE MTA ROUTING....14
FIGURE 12: TRAFFIC LOOP TEST....14
FIGURE 13: ADDRESSING PLAN....17

List of Tables

TABLE 1: DEFAULT MTA NAMES....15
TABLE 2: DEFAULT PASSWORDS....15
TABLE 3: TSAP ADDRESSES....15
TABLE 4: IP ADDRESSES....16
TABLE 5: DEFAULT TYPE AND NUMBER OF ASSOCIATIONS....16
TABLE 6: GENERIC ADDRESS SPACES OF IUTLAND-A....18
TABLE 7: GENERIC ADDRESS SPACES OF IUTLAND-B....18
TABLE 8: GENERIC ADDRESS SPACES OF IUTLAND-C....18
TABLE 9: DL ADDRESSES OF IUT-A....19
TABLE 10: DL ADDRESSES OF IUT-B....19
TABLE 11: AFTN ROUTING TABLE OF IUT-A....19
TABLE 12: X.400 ROUTING TABLE OF IUT-A....20
TABLE 13: AFTN ROUTING TABLE OF IUT-B....20
TABLE 14: X.400 ROUTING TABLE OF IUT-B....20
TABLE 15: AFTN ROUTING TABLE OF IUT-C....21
TABLE 16: X.400 ROUTING TABLE OF IUT-C....21
TABLE 17: GENERIC LOOK-UP TABLE (CAAS SINGLE "O" TYPE)....22
TABLE 18: GENERIC LOOK-UP TABLE ("XF" TYPE)....22
TABLE 19: ADDRESSES OF IUT-A (CAAS SINGLE "O" TYPE) IN A LOCAL AMHS USER ADDRESS BOOK....24
TABLE 20: ADDRESSES OF IUT-A ("XF" TYPE) IN A LOCAL AMHS USER ADDRESS BOOK....24
TABLE 21: O/R ADDRESSES IN IUT-A WHICH CANNOT BE CONVERTED INTO AFTN ADDRESSES....24
TABLE 22: ADDRESSES OF IUT-B (CAAS SINGLE "O" TYPE) IN A LOCAL AMHS USER ADDRESS BOOK....25
TABLE 23: ADDRESSES OF IUT-B (XF TYPE) IN A LOCAL AMHS USER ADDRESS BOOK....25
TABLE 24: O/R ADDRESSES IN IUT-B WHICH CANNOT BE CONVERTED INTO AFTN ADDRESSES....25
TABLE 25: ADDRESSES OF IUT-C (CAAS SINGLE "O" TYPE) IN A LOCAL AMHS USER ADDRESS BOOK....26
TABLE 26: ADDRESSES OF IUT-C (XF TYPE) IN A LOCAL AMHS USER ADDRESS BOOK....26
TABLE 27: ADDRESSES USED FOR LOOP DETECTION TESTS (CAAS SINGLE "O" TYPE)....26
TABLE 28: ADDRESSES USED FOR LOOP DETECTION TESTS (XF TYPE)....26

1. Introduction

1.1 Purpose of the Document

The purpose of the document is to define the functional tests for AMHS Interoperability in order to ensure the end-to-end interoperability between AMHS systems under test. These tests are performed after the successful completion of AMHS conformance testing, through which the compliance of all systems under test to the AMHS technical specifications has been demonstrated.

For this reason the data used in the interoperability tests are generated either:

- manually; or,
- using records obtained by copy (duplication) and storage of some real traffic occurred among users in service; or
- using parallel duplicated traffic.

Implementations tested in this phase will not be operational systems, but test beds in order to neither disturb the real traffic nor cause potential outages in the operational systems.

As a summary, the correct performance of the interoperability tests included in this document is the previous step to progress the IUT towards a future operational system; this will be done by means of a transition plan to real traffic in the future operational environment.

1.2 Document Structure

Chapter 2 presents the test environment used for AMHS interoperability testing.

Chapter 3 defines the addressing plan implemented in the test environment.

Chapters 4 and 5 contain the general description of the bilateral and trilateral test procedures with subsections for each AMHS functional area. Each test procedure is presented in a structured way consisting of

- defined test criteria,
- a (brief) scenario description,
- reference to the relevant part of the standard specification (Doc 9880, Part II, section),
- reference to similar test(s) performed in the FIRST interoperability tests [6] [7],

Chapters 6 and 7 contain the detailed test-case descriptions for the bilateral and trilateral test procedures.

Chapter 8 contains the templates for the test messages.

1.3 Test Identification Scheme

Each Interoperability Test procedure has an identifier in the form

ITxnn;

where IT is an acronym for Interoperability Test, *x* is a number identifying the test group[1] and *nn* is a consecutive number identifying the individual test procedure.

Test procedures are classified in two blocks: Bilateral Tests and Trilateral Tests.

The bilateral test groups consist of tests using messages specifically generated by IUTs for trials. The following six groups have been identified:

- testing of submission, transfer and delivery operations (x=1),
- testing of gateway operations converting a user message from AFTN to AMHS (x=2),
- testing of gateway operations converting a user message from AMHS to AFTN (x=3),
- testing of gateway operations converting a user message from AFTN to AMHS and back to AFTN (x=4),
- testing of gateway operations – special cases (x=5)and
- testing of stress traffic situations (x=6)

The two trilateral test groups are:

- testing of transfer (relay) operations (x=7),
- testing of special situations (alternate routing, traffic loop) (x=8).

[1] Test groups for AMHS conformance tests have been identified in [4].

2. AMHS Interoperability Test Environment

2.1 Application infrastructure

Both AMHS Implementations Under Test (IUTs) are complete systems constituted by AFTN, AMHS and AFTN/AMHS gateway components, with corresponding AFTN and AMHS user terminals and supervision positions, as decided locally by the corresponding organization.

In each IUT, an AMHS User Agent is used in submission and delivery tests. Gateway tests involve an AFTN user terminal. The use of the Monitor & Control Position is required in order to observe the outcome of the conversion processes, especially in out-of-line situations.

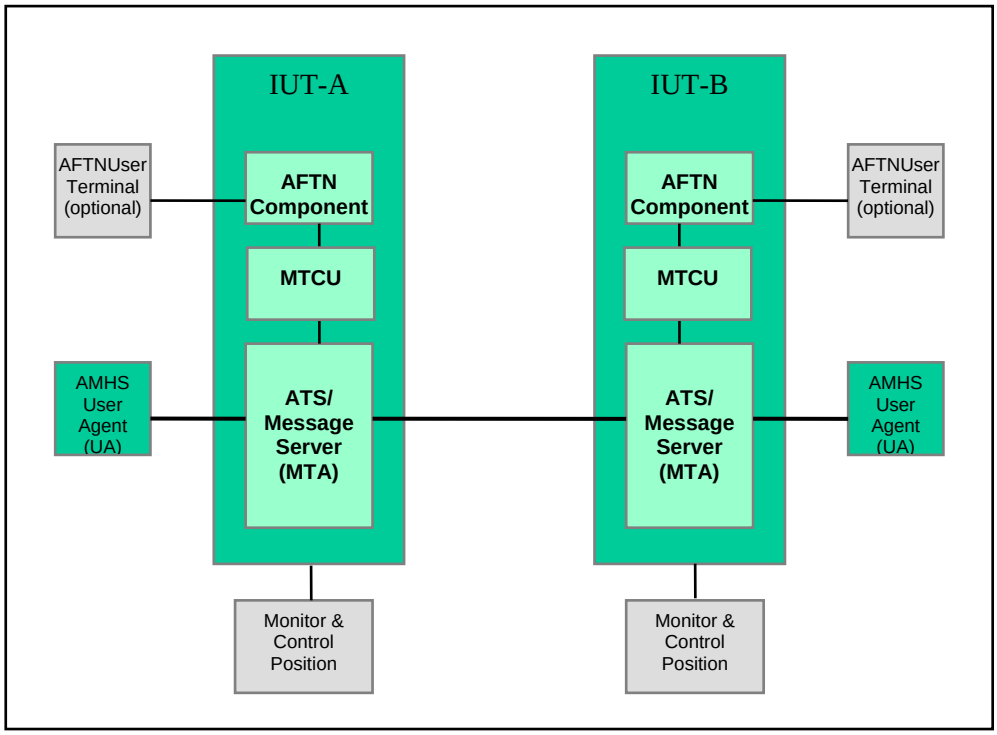

Figure 1: AMHS Interoperability Test Environment

Figure 1 shows the test environment used for AMHS interoperability tests. Both IUTs will be interconnected via AMHS transfer ports supporting the X.400/P1 protocol over a TCP/IP/LAN.

Note. – In Figure 1 the AFTN Terminal is directly connected to the AFTN Component in an abstract way. There may exist different implementations with an AFTN component only connected to an AFTN switch or integrated AFTN/AMHS switches. For the interoperability tests it does not matter whether the AFTN Terminal is connected directly or indirectly.

The components of the test environment as depicted in Figure 1 are involved in the test procedures in following way:

Submission, Transfer and Delivery operation tests (AMHS => AMHS) (x=1):

AMHS User Agent => ATS Message Server => ATS Message Server => AMHS User Agent

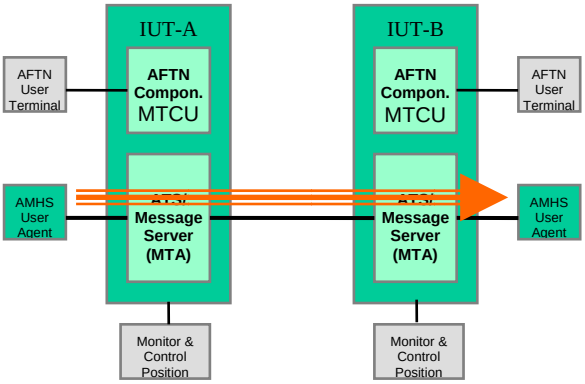

Figure 2: UA to UA (IUT-A to IUT-B)

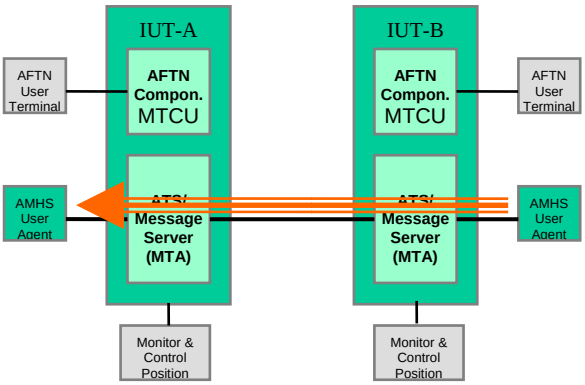

Figure 3: UA to UA (IUT-B to IUT-A)

AMHS / AFTN gateway tests (AFTN => AMHS) (x=2):

AFTN Terminal => Gateway and ATS Message Server => UA

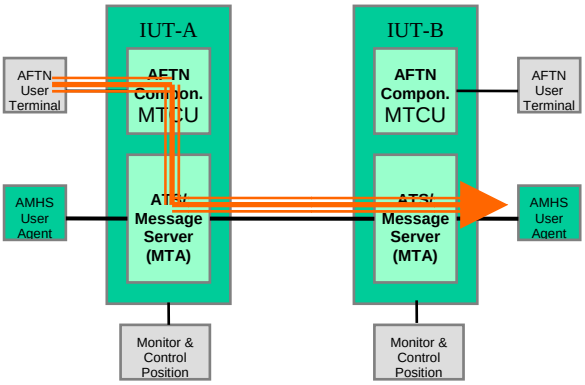

Figure 4: AFTN Terminal to UA (IUT-A to IUT-B)

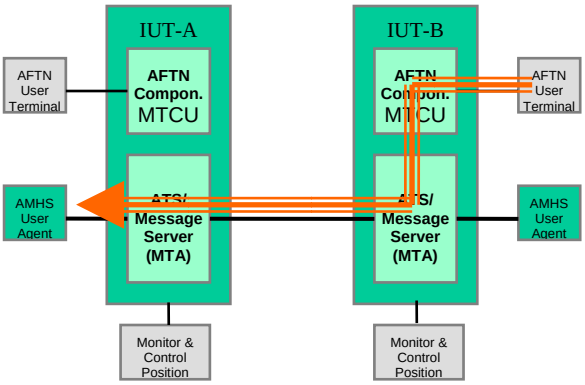

Figure 5: AFTN Terminal to UA (IUT-B to IUT-A)

AMHS / AFTN gateway tests (AMHS => AFTN) (x=3):

UA => ATS Message Server and Gateway => AFTN Terminal

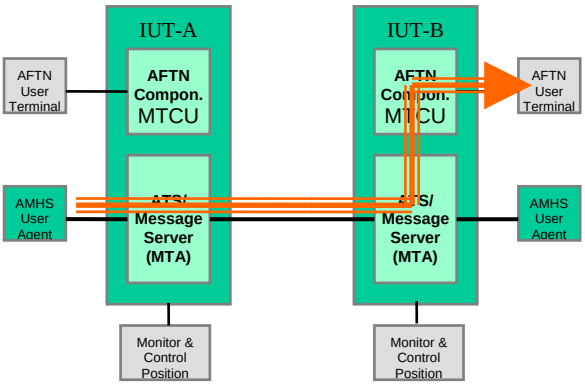

Figure 6: UA to AFTN Terminal (IUT-A to IUT-B)

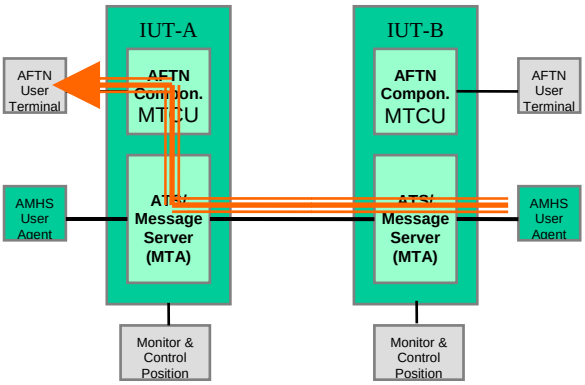

Figure 7: UA to AFTN Terminal (IUT-B to IUT-A)

AMHS / AFTN gateway tests (AFTN => AMHS => AFTN) (x=4):

AFTN Terminal => Gateway => ATS Message Servers => Gateway => AFTN Terminal

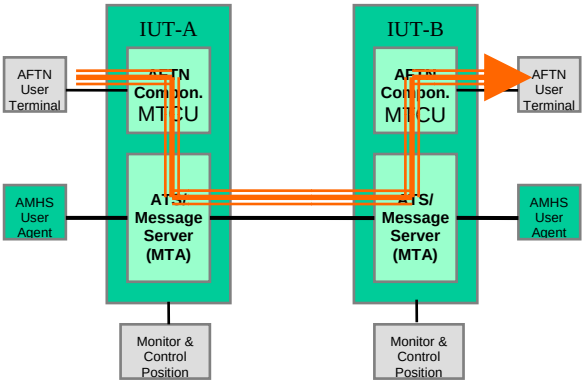

Figure 8: AFTN Terminal to AFTN Terminal (IUT-A to IUT-B)

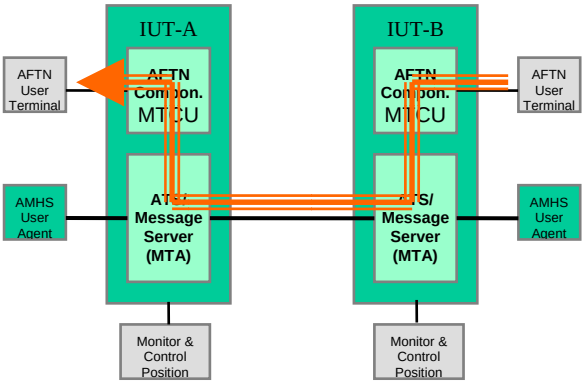

Figure 9: AFTN Terminal to AFTN Terminal (IUT-B to IUT-A)

Gateway Operations – special case scenarios (x=5)

For the special case scenarios different combinations of the flows shown above are used.

Stress traffic situations (x=6)

Depending on the stress scenario chosen combinations of the flows shown above are used.

"Relay" operation tests (x=7) *– (optional - additional test partner required – IUT-C)*

Peer IUT => IUT (ATS Message Server) => peer IUT

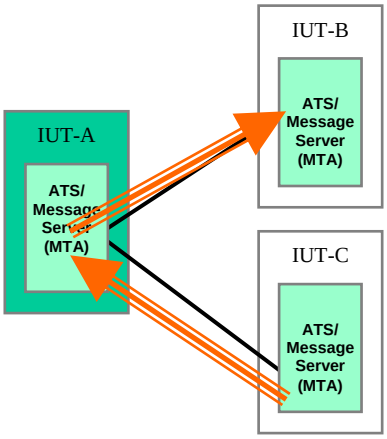

Figure 10: "Relay" operation tests

Testing of special situations (x=8) *– (optional - additional test partner required – IUT-C and – additional connectivity required IUT-B - IUT-C)*

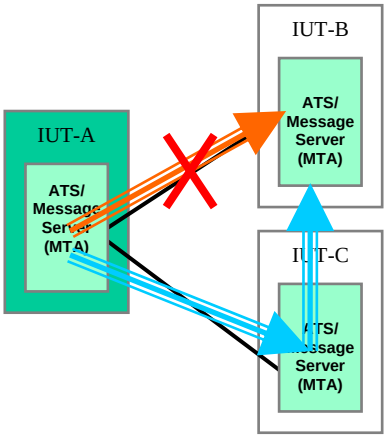

Figure 11: Alternate MTA routing

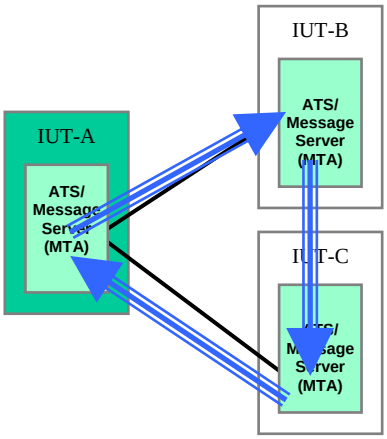

Figure 12: Traffic loop test

2.2 Transport infrastructure

To perform the bilateral interoperability tests, an underlying infrastructure for message transport between the two IUTs has to be agreed.

In case of multilateral tests an underlying infrastructure for message transport between the involved IUTs (minimum three) has to be agreed.

In the EUR Region the infrastructure to be used is based in the TCP/IP protocol (IPv4/IPv6). However, other, "non-standard" solutions may be used for testing. Those refer to the actual network environment or other means offered by communications suppliers, such as ADSL, public internet; in this case, agreement among the parties is necessary due to the potential impact of this solution on the configuration of the timers of the systems concerned, as compared to the standard solution.

2.3 General parameters to be agreed

The following entries and/or parameter shall be agreed between the test partners. Preferred the default values should be used.

2.3.1 Default MTA names and passwords

IUT	MTA name	Remarks
IUT-A	MTA-IUTA-1	
IUT-B	MTA-IUTB-1	
IUT-C	MTA-IUTC-1	

Table 1: Default MTA names

IUT	password	Remarks
IUT-A	ICAO-IUTA-1	
IUT-B	ICAO-IUTB-1	
IUT-C	ICAO-IUTC-1	

Table 2: Default passwords

2.3.2 TSAP addresses

IUT	TSAP address	Remarks
IUT-A	to be agreed bilaterally	
IUT-B	to be agreed bilaterally	
IUT-C	to be agreed	

Table 3: TSAP addresses

2.3.3 IP addresses

IUT	IP address	Remarks
IUT-A	to be agreed bilaterally	
IUT-B	to be agreed bilaterally	
IUT-C	to be agreed	

Table 4: IP addresses

2.3.4 Type and number of associations

IUT	Type of associations	Number of associations	Remarks
IUT-A	monologue	5	
IUT-B	monologue	5	
IUT-C	monologue	5	

Table 5: Default type and number of associations

3. Addressing Plan for AMHS Interoperability Testing

3.1 User addresses

To meet the scope of testing, the test-address space used by AMHS Interoperability Testing should include, for each IUT, the respective AFTN and AMHS addresses and the corresponding AMHS PRMD.

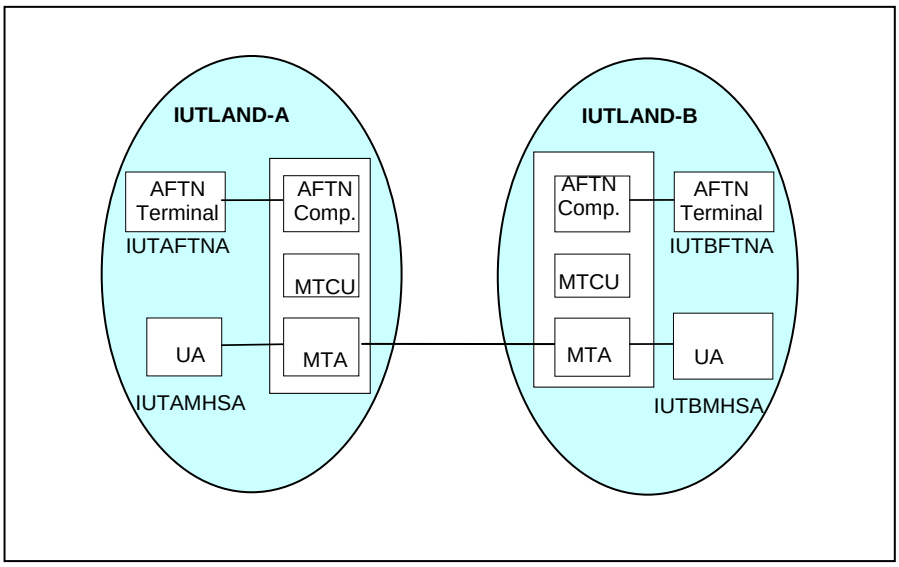

Figure 13: Addressing Plan

The original, operational AMHS and AFTN addresses assigned to the COM Centre could be used as test addresses for each IUT. To distinguish between operational and test addresses it is recommended to use alternatively, a generic address space taken from fictitious PRMD/AFTN countries IUTLAND-A and IUTLAND-B.

This includes generic user addresses IUTAFTNA and IUTAMHSA for IUTLAND-A as well as IUTBFTNA and IUTBMHSA for IUTLAND-B, which may be mapped either according to the CAAS (preferred, or a more comprehensive set of addresses in case of CAAS with multiple "O" values) or the XF addressing scheme.

The following tables show the generic address space assigned to the two IUTs and a third IUT if trilateral network tests are performed.

CAAS (preferred) – single "O"	CAAS – multiple "O"	XF
C = XX ADMD = ICAO PRMD = IUTLAND-A O = A-REGION OU1 = IUTA CN = IUTAFTNA ... IUTAMHSA	C = XX ADMD = ICAO PRMD = IUTLAND-A O = A-REGION1 OU1 = IUTA CN = IUTAFTNA ... IUTAMHSA O = A-REGION2 OU1 = IUAA CN = IUAAFTNA ... IUAAMHSA	C = XX ADMD = ICAO PRMD = IUTLAND-A O = AFTN OU1 = IUTAFTNA ... IUTAMHSA

Table 6: Generic address spaces of IUTLAND-A

CAAS (preferred) – single "O"	CAAS – multiple "O"	XF
C = XX ADMD = ICAO PRMD = IUTLAND-B O = B-REGION OU1 = IUTB CN = IUTBFTNA ... IUTBMHSA	C = XX ADMD = ICAO PRMD = IUTLAND-B O = B-REGION1 OU1 = IUTB CN = IUTBFTNA ... IUTBMHSA O = B-REGION2 OU1 = IUBB CN = IUBBFTNA ... IUBBMHSA	C = XX ADMD = ICAO PRMD = IUTLAND-B O = AFTN OU1 = IUTBFTNA ... IUTBMHSA

Table 7: Generic address spaces of IUTLAND-B

CAAS (preferred) – single "O"	CAAS – multiple "O"	XF
C = XX ADMD = ICAO PRMD = IUTLAND-C O = C-REGION OU1 = IUTC CN = IUTCFTNA ... IUTCMHSA	C = XX ADMD = ICAO PRMD = IUTLAND-C O = B-REGION1 OU1 = IUTC CN = IUTCFTNA ... IUTCMHSA O = B-REGION2 OU1 = IUCC CN = IUCCFTNA ... IUCCMHSA	C = XX ADMD = ICAO PRMD = IUTLAND-C O = AFTN OU1 = IUTCFTNA ... IUTCMHSA

Table 8: Generic address spaces of IUTLAND-C

3.2 DL addresses

Distribution List name	Addresses included in the DL	Remarks
IUTADLLO	IUTBFTNA IUTBFTNB IUTBMHSA	
IUTADLRE	IUTAFTNA IUTAFTNB IUTAMHSA	

Table 9: DL addresses of IUT-A

Distribution List name	Addresses included in the DL	Remarks
IUTBDLLO	IUTAFTNA IUTAFTNB IUTAMHSA	
IUTBDLRE	IUTBFTNA IUTBFTNB IUTBMHSA	

Table 10: DL addresses of IUT-B

3.3 AFTN and X.400 Routing Tables

3.3.1 AFTN and X.400 Routing Tables of IUT-A

AFTN Routing Indicator	Routing direction	Remarks
IUTAFT*	AFTN Terminal	
IUTA*	MTCU	
IUTB*	MTCU	
IUTC*	MTCU	

Table 11: AFTN Routing Table of IUT-A

X.400 Routing Indicator	Routing direction	Remarks
/C=XX/A=ICAO/P=IUTLAND-A /O=A-REGION/OU1=IUTA/CN=IUTAMHSA/	UA IUT-A	If CAAS “single “O” type
/C=XX/A=ICAO/P=IUTLAND-A /O=A-REGION/OU1=IUTA/CN=IUTAMHSB/	UA IUT-A	If CAAS “single “O” type
/C=XX/A=ICAO/P=IUTLAND-A /O=A-REGION/OU1=IUTA/CN=IUTAMHSC/	UA IUT-A	If CAAS “single “O” type
/C=XX/A=ICAO/P=IUTLAND-A /O=AFTN/OU1=IUTAMHSA/	UA IUT-A	If “XF” type
/C=XX/A=ICAO/P=IUTLAND-A /O=AFTN/OU1=IUTAMHSB/	UA IUT-A	If “XF” type
/C=XX/A=ICAO/P=IUTLAND-A /O=AFTN/OU1=IUTAMHSC/	UA IUT-A	If “XF” type
/C=XX/A=ICAO/P=IUTLAND-A	MTCU	
/C=XX/A=ICAO/P=IUTLAND-B	MTA-IUTB-1	See note below

X.400 Routing Indicator	Routing direction	Remarks
/C=XX/A=ICAO/P=IUTLAND-C	MTA-IUTC-1	See note below
/C=XX/A=ICAO/P=IUTLAND-X	MTA-IUTB-1	See note below

Table 12: X.400 Routing Table of IUT-A

Note - The naming scheme described in [3], Chapter 8 is used.

3.3.2 AFTN and X.400 Routing Tables of IUT-B

AFTN Routing Indicator	Routing direction	Remarks
IUTBFT*	AFTN Terminal	
IUTA*	MTCU	
IUTB*	MTCU	
IUTC*	MTCU	

Table 13: AFTN Routing Table of IUT-B

X.400 Routing Indicator	Routing direction	Remarks
/C=XX/A=ICAO/P=IUTLAND-B /O=B-REGION/OU1=IUTB/CN=IUTBMHSA/	UA IUT-B	If CAAS “single “O” type
/C=XX/A=ICAO/P=IUTLAND-B /O=B-REGION/OU1=IUTB/CN=IUTBMHSB/	UA IUT-B	If CAAS “single “O” type
/C=XX/A=ICAO/P=IUTLAND-B /O=B-REGION/OU1=IUTB/CN=IUTBMHSC/	UA IUT-B	If CAAS “single “O” type
/C=XX/A=ICAO/P=IUTLAND-B /O=AFTN/OU1=IUTBMHSA/	UA IUT-B	If “XF” type
/C=XX/A=ICAO/P=IUTLAND-B /O=AFTN/OU1=IUTBMHSB/	UA IUT-B	If “XF” type
/C=XX/A=ICAO/P=IUTLAND-B /O=AFTN/OU1=IUTBMHSC/	UA IUT-B	If “XF” type
/C=XX/A=ICAO/P=IUTLAND-B	MTCU	
/C=XX/A=ICAO/P=IUTLAND-A	MTA-IUTA-1	See note in 3.3.1
/C=XX/A=ICAO/P=IUTLAND-C	MTA-IUTC-1	See note in 3.3.1
/C=XX/A=ICAO/P=IUTLAND-X	MTA-IUTC-1	See note in 3.3.1

Table 14: X.400 Routing Table of IUT-B

3.3.3 AFTN and X.400 Routing Tables of IUT-C

AFTN Routing Indicator	Routing direction	Remarks
IUTCFT*	AFTN Terminal	
IUTA*	MTCU	
IUTB*	MTCU	
IUTC*	MTCU	

Table 15: AFTN Routing Table of IUT-C

X.400 Routing Indicator	Routing direction	Remarks
/C=XX/A=ICAO/P=IUTLAND-C /O=C-REGION/OU1=IUTC/CN=IUTCMHSA/	UA IUT-C	If CAAS "single "O" type
/C=XX/A=ICAO/P=IUTLAND-C /O=C-REGION/OU1=IUTC/CN=IUTCMHSB/	UA IUT-C	If CAAS "single "O" type
/C=XX/A=ICAO/P=IUTLAND-C /O=C-REGION/OU1=IUTC/CN=IUTCMHSC/	UA IUT-C	If CAAS "single "O" type
/C=XX/A=ICAO/P=IUTLAND-C /O=AFTN/OU1=IUTCMHSA/	UA IUT-C	If "XF" type
/C=XX/A=ICAO/P=IUTLAND-C /O=AFTN/OU1=IUTCMHSB/	UA IUT-C	If "XF" type
/C=XX/A=ICAO/P=IUTLAND-C /O=AFTN/OU1=IUTCMHSC/	UA IUT-C	If "XF" type
/C=XX/A=ICAO/P=IUTLAND-C	MTCU	
/C=XX/A=ICAO/P=IUTLAND-A	MTA-IUTA-1	See note in 3.3.1
/C=XX/A=ICAO/P=IUTLAND-B	MTA-IUTB-1	See note in 3.3.1
/C=XX/A=ICAO/P=IUTLAND-X	MTA-IUTA-1	See note in 3.3.1

Table 16: X.400 Routing Table of IUT-C

3.4 Look-up Table

3.4.1 Generic look-up Table for all Implementations Under Test (IUT) (CAAS single "O" type)

AFTN address	O/R Address (CAAS single "O" type)
IUTAFTN*	/C=XX/A=ICAO/P=IUTLAND-A/O=A-REGION/OU1=IUTA/
IUTAFTA*	/C=XX/A=ICAO/P=IUTLAND-A/O=A-REGION/OU1=IUTA/
IUTAMHSA	/C=XX/A=ICAO/P=IUTLAND-A/O=A-REGION/OU1=IUTA/CN=IUTAMHSA/
IUTAMHSB	/C=XX/A=ICAO/P=IUTLAND-A/O=A-REGION/OU1=IUTA/CN=IUTAMHSB/
IUTAMHSC	/C=XX/A=ICAO/P=IUTLAND-A/O=A-REGION/OU1=IUTA/CN=IUTAMHSC/
IUTADLLO	/C=XX/A=ICAO/P=IUTLAND-A/O=A-REGION/OU1=IUTA/CN=IUTADLLO/

AFTN address	O/R Address (CAAS single "O" type)
IUTADLRE	/C=XX/A=ICAO/P=IUTLAND-A/O=A-REGION/OU1=IUTA/CN=IUTADLRE/
IUTBFTN*	/C=XX/A=ICAO/P=IUTLAND-B/O=B-REGION/OU1=IUTB/
IUTBFTA*	/C=XX/A=ICAO/P=IUTLAND-B/O=B-REGION/OU1=IUTB/
IUTBMHSA	/C=XX/A=ICAO/P=IUTLAND-B/O=B-REGION/OU1=IUTB/CN=IUTBMHSA/
IUTBMHSB	/C=XX/A=ICAO/P=IUTLAND-B/O=B-REGION/OU1=IUTB/CN=IUTBMHSB/
IUTBMHSC	/C=XX/A=ICAO/P=IUTLAND-B/O=B-REGION/OU1=IUTB/CN=IUTBMHSC/
IUTBDLLO	/C=XX/A=ICAO/P=IUTLAND-B/O=B-REGION/OU1=IUTB/CN=IUTBDLLO/
IUTBDLRE	/C=XX/A=ICAO/P=IUTLAND-B/O=B-REGION/OU1=IUTB/CN=IUTBDLRE/
IUTCFTNA	/C=XX/A=ICAO/P=IUTLAND-C/O=C-REGION/OU1=IUTC/CN=IUTCFTNA/
IUTCMHSA	/C=XX/A=ICAO/P=IUTLAND-C/O=C-REGION/OU1=IUTC/CN=IUTCMHSA/
IUTXLOOP	/C=XX/A=ICAO/P=IUTLAND-X/O=X-REGION/OU1=IUTX/CN=IUTXLOOP/

Table 17: Generic look-up table (CAAS single "O" type)

3.4.2 Generic look-up Table for all Implementations Under Test (IUT) ("XF" type)

AFTN address	O/R Address ("XF" type)
IUTAFTN*	/C=XX/A=ICAO/P=IUTLAND-A/
IUTAFTA*	/C=XX/A=ICAO/P=IUTLAND-A/
IUTAMHSA	/C=XX/A=ICAO/P=IUTLAND-A/O=AFTN/OU1=IUTAMHSA/
IUTAMHSB	/C=XX/A=ICAO/P=IUTLAND-A/O=AFTN/OU1=IUTAMHSB/
IUTAMHSC	/C=XX/A=ICAO/P=IUTLAND-A/O=AFTN/OU1=IUTAMHSC/
IUTADLLO	/C=XX/A=ICAO/P=IUTLAND-A/O=AFTN/OU1=IUTADLLO/
IUTADLRE	/C=XX/A=ICAO/P=IUTLAND-A/O=AFTN/OU1=IUTADLRE/
IUTBFTN*	/C=XX/A=ICAO/P=IUTLAND-B/
IUTBFTA*	/C=XX/A=ICAO/P=IUTLAND-B/
IUTBMHSA	/C=XX/A=ICAO/P=IUTLAND-B/O=AFTN/OU1=IUTBMHSA/
IUTBMHSB	/C=XX/A=ICAO/P=IUTLAND-B/O=AFTN/OU1=IUTBMHSB/
IUTBMHSC	/C=XX/A=ICAO/P=IUTLAND-B/O=AFTN/OU1=IUTBMHSC/
IUTBDLLO	/C=XX/A=ICAO/P=IUTLAND-B/O=AFTN/OU1=IUTBDLLO/
IUTBDLRE	/C=XX/A=ICAO/P=IUTLAND-B/O=AFTN/OU1=IUTBDLRE/
IUTCFTNA	/C=XX/A=ICAO/P=IUTLAND-C/O=AFTN/OU1=IUTCFTNA/
IUTCMHSA	/C=XX/A=ICAO/P=IUTLAND-C/O=AFTN/OU1=IUTCMHSA/
IUTXLOOP	/C=XX/A=ICAO/P=IUTLAND-X/O=AFTN/OU1=IUTXLOOP/

Table 18: Generic look-up table ("XF" type)

Note. – There are further possibilities: IUT-A could have XF addressing scheme whilst IUT-B has CAAS, or vice-versa. In such a case, the corresponding table entries should

be selected. To simplify matters it is recommended to use CAAS single "O" type or "XF" type only.

3.5 Local AMHS User address book

3.5.1 Addresses of IUT-A in a local AMHS User address book

If IUT-A is configured as a domain using the CAAS addressing scheme, the entries as in Table 19 and Table 21 are used within the tests. If IUT-A is configured as a domain using the XF addressing scheme, the entries as in Table 20 and Table 21 are used. The test partners may include the addresses into their local address books.

Nick name	O/R Address (CAAS single "O" type)
IUTAFTNA	/C=XX/A=ICAO/P=IUTLAND-A/O=A-REGION/OU1=IUTA/CN=IUTAFTNA/
IUTAFTNB	/C=XX/A=ICAO/P=IUTLAND-A/O=A-REGION/OU1=IUTA/CN=IUTAFTNB/
IUTAFTNC	/C=XX/A=ICAO/P=IUTLAND-A/O=A-REGION/OU1=IUTA/CN=IUTAFTNC/
IUTAFTND	/C=XX/A=ICAO/P=IUTLAND-A/O=A-REGION/OU1=IUTA/CN=IUTAFTND/
IUTAFTNE	/C=XX/A=ICAO/P=IUTLAND-A/O=A-REGION/OU1=IUTA/CN=IUTAFTNE/
IUTAFTNF	/C=XX/A=ICAO/P=IUTLAND-A/O=A-REGION/OU1=IUTA/CN=IUTAFTNF/
IUTAFTNG	/C=XX/A=ICAO/P=IUTLAND-A/O=A-REGION/OU1=IUTA/CN=IUTAFTNG/
IUTAFTNH	/C=XX/A=ICAO/P=IUTLAND-A/O=A-REGION/OU1=IUTA/CN=IUTAFTNH/
IUTAFTNI	/C=XX/A=ICAO/P=IUTLAND-A/O=A-REGION/OU1=IUTA/CN=IUTAFTNI/
IUTAFTNJ	/C=XX/A=ICAO/P=IUTLAND-A/O=A-REGION/OU1=IUTA/CN=IUTAFTNJ/
IUTAFTNK	/C=XX/A=ICAO/P=IUTLAND-A/O=A-REGION/OU1=IUTA/CN=IUTAFTNK/
IUTAFTNL	/C=XX/A=ICAO/P=IUTLAND-A/O=A-REGION/OU1=IUTA/CN=IUTAFTNL/
IUTAFTNM	/C=XX/A=ICAO/P=IUTLAND-A/O=A-REGION/OU1=IUTA/CN=IUTAFTNM/
IUTAFTNN	/C=XX/A=ICAO/P=IUTLAND-A/O=A-REGION/OU1=IUTA/CN=IUTAFTNN/
IUTAFTNO	/C=XX/A=ICAO/P=IUTLAND-A/O=A-REGION/OU1=IUTA/CN=IUTAFTNO/
IUTAFTNP	/C=XX/A=ICAO/P=IUTLAND-A/O=A-REGION/OU1=IUTA/CN=IUTAFTNP/
IUTAFTNQ	/C=XX/A=ICAO/P=IUTLAND-A/O=A-REGION/OU1=IUTA/CN=IUTAFTNQ/
IUTAFTNR	/C=XX/A=ICAO/P=IUTLAND-A/O=A-REGION/OU1=IUTA/CN=IUTAFTNR/
IUTAFTNS	/C=XX/A=ICAO/P=IUTLAND-A/O=A-REGION/OU1=IUTA/CN=IUTAFTNS/
IUTAFTNT	/C=XX/A=ICAO/P=IUTLAND-A/O=A-REGION/OU1=IUTA/CN=IUTAFTNT/
IUTAFTNU	/C=XX/A=ICAO/P=IUTLAND-A/O=A-REGION/OU1=IUTA/CN=IUTAFTNU/
IUTAFTNV	/C=XX/A=ICAO/P=IUTLAND-A/O=A-REGION/OU1=IUTA/CN=IUTAFTNV/
IUTAFTNW	/C=XX/A=ICAO/P=IUTLAND-A/O=A-REGION/OU1=IUTA/CN=IUTAFTNW/
IUTAFTNX	/C=XX/A=ICAO/P=IUTLAND-A/O=A-REGION/OU1=IUTA/CN=IUTAFTNX/
IUTAFTNY	/C=XX/A=ICAO/P=IUTLAND-A/O=A-REGION/OU1=IUTA/CN=IUTAFTNY/
IUTAFTAA	/C=XX/A=ICAO/P=IUTLAND-A/O=A-REGION/OU1=IUTA/CN=IUTAFTAA/
IUTAFTAB	/C=XX/A=ICAO/P=IUTLAND-A/O=A-REGION/OU1=IUTA/CN=IUTAFTAB/
IUTAFTAC	/C=XX/A=ICAO/P=IUTLAND-A/O=A-REGION/OU1=IUTA/CN=IUTAFTAC/
IUTAFTAD	/C=XX/A=ICAO/P=IUTLAND-A/O=A-REGION/OU1=IUTA/CN=IUTAFTAD/
IUTAFTAE	/C=XX/A=ICAO/P=IUTLAND-A/O=A-REGION/OU1=IUTA/CN=IUTAFTAE/
IUTAFTAF	/C=XX/A=ICAO/P=IUTLAND-A/O=A-REGION/OU1=IUTA/CN=IUTAFTAF/
IUTAFTAG	/C=XX/A=ICAO/P=IUTLAND-A/O=A-REGION/OU1=IUTA/CN=IUTAFTAG/
IUTAFTAH	/C=XX/A=ICAO/P=IUTLAND-A/O=A-REGION/OU1=IUTA/CN=IUTAFTAH/
IUTAFTAI	/C=XX/A=ICAO/P=IUTLAND-A/O=A-REGION/OU1=IUTA/CN=IUTAFTAI/
IUTAFTAJ	/C=XX/A=ICAO/P=IUTLAND-A/O=A-REGION/OU1=IUTA/CN=IUTAFTAJ/
IUTAFTAK	/C=XX/A=ICAO/P=IUTLAND-A/O=A-REGION/OU1=IUTA/CN=IUTAFTAK/
IUTAFTAL	/C=XX/A=ICAO/P=IUTLAND-A/O=A-REGION/OU1=IUTA/CN=IUTAFTAL/
IUTAFTAM	/C=XX/A=ICAO/P=IUTLAND-A/O=A-REGION/OU1=IUTA/CN=IUTAFTAM/

Nick name	O/R Address (CAAS single "O" type)
IUTAFTAN	/C=XX/A=ICAO/P=IUTLAND-A/O=A-REGION/OU1=IUTA/CN=IUTAFTAN/
IUTAFTAO	/C=XX/A=ICAO/P=IUTLAND-A/O=A-REGION/OU1=IUTA/CN=IUTAFTAO/
IUTAFTAP	/C=XX/A=ICAO/P=IUTLAND-A/O=A-REGION/OU1=IUTA/CN=IUTAFTAP/
IUTAFTAQ	/C=XX/A=ICAO/P=IUTLAND-A/O=A-REGION/OU1=IUTA/CN=IUTAFTAQ/
IUTAFTAR	/C=XX/A=ICAO/P=IUTLAND-A/O=A-REGION/OU1=IUTA/CN=IUTAFTAR/
IUTAFTAS	/C=XX/A=ICAO/P=IUTLAND-A/O=A-REGION/OU1=IUTA/CN=IUTAFTAS/
IUTAFTAT	/C=XX/A=ICAO/P=IUTLAND-A/O=A-REGION/OU1=IUTA/CN=IUTAFTAT/
IUTAFTAU	/C=XX/A=ICAO/P=IUTLAND-A/O=A-REGION/OU1=IUTA/CN=IUTAFTAU/
IUTAFTAV	/C=XX/A=ICAO/P=IUTLAND-A/O=A-REGION/OU1=IUTA/CN=IUTAFTAV/
IUTAFTAW	/C=XX/A=ICAO/P=IUTLAND-A/O=A-REGION/OU1=IUTA/CN=IUTAFTAW/
IUTAFTAX	/C=XX/A=ICAO/P=IUTLAND-A/O=A-REGION/OU1=IUTA/CN=IUTAFTAX/
IUTAFTAY	/C=XX/A=ICAO/P=IUTLAND-A/O=A-REGION/OU1=IUTA/CN=IUTAFTAY/
IUTAMHSA	/C=XX/A=ICAO/P=IUTLAND-A/O=A-REGION/OU1=IUTA/CN=IUTAMHSA/
IUTAMHSB	/C=XX/A=ICAO/P=IUTLAND-A/O=A-REGION/OU1=IUTA/CN=IUTAMHSB/
IUTAMHSC	/C=XX/A=ICAO/P=IUTLAND-A/O=A-REGION/OU1=IUTA/CN=IUTAMHSC/
IUTADLLO	/C=XX/A=ICAO/P=IUTLAND-A/O=A-REGION/OU1=IUTA/CN=IUTADLLO/
IUTADLRE	/C=XX/A=ICAO/P=IUTLAND-A/O=A-REGION/OU1=IUTA/CN=IUTADLRE/

Table 19: Addresses of IUT-A (CAAS single "O" type) in a local AMHS user address book

Nick name	O/R Address ("XF" type)
IUTAFTNA	/C=XX/A=ICAO/P=IUTLAND-A/O=AFTN/OU1=IUTAFTNA/
IUTAFTNB	/C=XX/A=ICAO/P=IUTLAND-A/O=AFTN/OU1=IUTAFTNB/
IUTAFTNC	/C=XX/A=ICAO/P=IUTLAND-A/O=AFTN/OU1=IUTAFTNC/
till	**To be continued till**
IUTAFTNY	/C=XX/A=ICAO/P=IUTLAND-A/O=AFTN/OU1=IUTAFTNY/
IUTAFTAA	/C=XX/A=ICAO/P=IUTLAND-A/O=AFTN/OU1=IUTAFTAA/
till	**To be continued till**
IUTAFTAY	/C=XX/A=ICAO/P=IUTLAND-A/O=AFTN/OU1=IUTAFTAY/
IUTAMHSA	/C=XX/A=ICAO/P=IUTLAND-A/O=AFTN/OU1=IUTAMHSA/
IUTAMHSB	/C=XX/A=ICAO/P=IUTLAND-A/O=AFTN/OU1=IUTAMHSB/
IUTAMHSC	/C=XX/A=ICAO/P=IUTLAND-A/O=AFTN/OU1=IUTAMHSC/
IUTADLLO	/C=XX/A=ICAO/P=IUTLAND-A/O=AFTN/OU1=IUTADLLO/
IUTADLRE	/C=XX/A=ICAO/P=IUTLAND-A/O=AFTN/OU1=IUTADLRE/

Table 20: Addresses of IUT-A ("XF" type) in a local AMHS user address book

Nick name	O/R Address
IUTAFTUU	/C=XX/A=ICAO/P=IUTLAND-A/O=A-REGION/OU1=IUTC/CN=IUTAFTUU/
IUTAFTUV	/C=XX/A=ICAO/P=IUTLAND-A/O=AFTN/OU1=IUTAFT/

Table 21: O/R addresses in IUT-A which cannot be converted into AFTN addresses

The addresses as in Table 21 must not be included in the User Address Look-Up table of IUT-A.

3.5.2 Addresses of IUT-B in a local AMHS User address book

If IUT-B is configured as a domain using the CAAS addressing scheme, the entries as in Table 22 and Table 24 are used within the tests. If IUT-B is configured as a domain using the XF addressing scheme, the entries as in Table 23 and Table 24 are used. The test partners may include the addresses into their local address books.

Nick name	O/R Address (CAAS single "O" type)
IUTBFTNA	/C=XX/A=ICAO/P=IUTLAND-B/O=B-REGION/OU1=IUTB/CN=IUTBFTNA/
IUTBFTNB	/C=XX/A=ICAO/P=IUTLAND-B/O=B-REGION/OU1=IUTB/CN=IUTBFTNB/
IUTBFTNC	/C=XX/A=ICAO/P=IUTLAND-B/O=B-REGION/OU1=IUTB/CN=IUTBFTNC/
till	**To be continued till**
IUTBFTNY	/C=XX/A=ICAO/P=IUTLAND-B/O=B-REGION/OU1=IUTB/CN=IUTBFTNY/
IUTBFTAA	/C=XX/A=ICAO/P=IUTLAND-B/O=B-REGION/OU1=IUTB/CN=IUTBFTAA/
till	**To be continued till**
IUTBFTAY	/C=XX/A=ICAO/P=IUTLAND-B/O=B-REGION/OU1=IUTB/CN=IUTBFTAY/
IUTBMHSA	/C=XX/A=ICAO/P=IUTLAND-B/O=B-REGION/OU1=IUTB/CN=IUTBMHSA/
IUTBMHSB	/C=XX/A=ICAO/P=IUTLAND-B/O=B-REGION/OU1=IUTB/CN=IUTBMHSB/
IUTBMHSC	/C=XX/A=ICAO/P=IUTLAND-B/O=B-REGION/OU1=IUTB/CN=IUTBMHSC/
IUTBDLLO	/C=XX/A=ICAO/P=IUTLAND-B/O=B-REGION/OU1=IUTB/CN=IUTBDLLO/
IUTBDLRE	/C=XX/A=ICAO/P=IUTLAND-B/O=B-REGION/OU1=IUTB/CN=IUTBDLRE/

Table 22: Addresses of IUT-B (CAAS single "O" type) in a local AMHS user address book

Nick name	O/R Address ("XF" type)
IUTBFTNA	/C=XX/A=ICAO/P=IUTLAND-B/O=AFTN/OU1=IUTBFTNA/
IUTBFTNB	/C=XX/A=ICAO/P=IUTLAND-B/O=AFTN/OU1=IUTBFTNB/
IUTBFTNC	/C=XX/A=ICAO/P=IUTLAND-B/O=AFTN/OU1=IUTBFTNC/
till	**To be continued till**
IUTBFTNY	/C=XX/A=ICAO/P=IUTLAND-B/O=AFTN/OU1=IUTBFTNY/
IUTBFTAA	/C=XX/A=ICAO/P=IUTLAND-B/O=AFTN/OU1=IUTBFTAA/
till	**To be continued till**
IUTBFTAY	/C=XX/A=ICAO/P=IUTLAND-B/O=AFTN/OU1=IUTBFTAY/
IUTBMHSA	/C=XX/A=ICAO/P=IUTLAND-B/O=AFTN/OU1=IUTBMHSA/
IUTBMHSB	/C=XX/A=ICAO/P=IUTLAND-B/O=AFTN/OU1=IUTBMHSB/
IUTBMHSC	/C=XX/A=ICAO/P=IUTLAND-B/O=AFTN/OU1=IUTBMHSC/
IUTBDLLO	/C=XX/A=ICAO/P=IUTLAND-B/O=AFTN/OU1=IUTBDLLO/
IUTBDLRE	/C=XX/A=ICAO/P=IUTLAND-B/O=AFTN/OU1=IUTBDLRE/

Table 23: Addresses of IUT-B (XF type) in a local AMHS user address book

Nick name	O/R Address
IUTBFTUU	/C=XX/A=ICAO/P=IUTLAND-B/O=B-REGION/OU1=IUTC/CN=IUTBFTUU/
IUTBFTUV	/C=XX/A=ICAO/P=IUTLAND-B/O=AFTN/OU1=IUTBFT/

Table 24: O/R addresses in IUT-B which cannot be converted into AFTN addresses

The addresses as in Table 24 must not be included in the User Address Look-Up table of IUT-B.

3.5.3 Addresses of IUT-C in a local AMHS User address book

If IUT-C is configured as a domain using the CAAS addressing scheme, the entry as in Table 25 is used within the tests. If IUT-C is configured as a domain using the XF addressing scheme, the entry as in Table 26 is used. The test partners may include the addresses into their local address books.

Nick name	O/R Address (CAAS single "O" type)
IUTCMHSA	/C=XX/A=ICAO/P=IUTLAND-C/O=C-REGION/OU1=IUTC/CN=IUTCMHSA/

Table 25: Addresses of IUT-C (CAAS single "O" type) in a local AMHS user address book

Nick name	O/R Address ("XF" type)
IUTCMHSA	/C=XX/A=ICAO/P=IUTLAND-C/O=AFTN/OU1=IUTCMHSA/

Table 26: Addresses of IUT-C (XF type) in a local AMHS user address book

3.5.4 Addresses used for loop detection tests

Nick name	O/R Address (CAAS single "O" type)
IUTXLOOP	/C=XX/A=ICAO/P=IUTLAND-X/O=X-REGION/OU1=IUTX/CN=IUTXLOOP/

Table 27: Addresses used for loop detection tests (CAAS single "O" type)

Nick name	O/R Address ("XF" type)
IUTXLOOP	/C=XX/A=ICAO/P=IUTLAND-X/O=AFTN/OU1=IUTXLOOP/

Table 28: Addresses used for loop detection tests (XF type)

Note. - For the loop detection test it is irrelevant whether IUTXLOOP is a CAAS or an XF address.

4. Bilateral Test Procedures

4.1 Submission, Transfer and Delivery Operation (AMHS to AMHS)

4.1.1 IT101 – Submit, transfer and deliver an IPM (UA IUT-A to UA IUT-B)

IT101	**Submit, transfer and deliver an IPM (UA IUT-A to UA IUT-B)**
Test criteria	This test is successful, if the MTA of the sending IUT transfers the submitted ATS messages (IPM) correctly to a peer MTA which delivers the ATS messages (IPM) to the UA of the receiving IUT.
Scenario description	From the UA of IUT-A send a sequence of five ATS messages (IPMs) to the IUT addressing a remote AMHS user in the peer IUT, via AMHS. • Message 1 (IT101M01) shall have ATS-message-priority KK. • Message 2 (IT101M02) shall have ATS-message-priority GG. • Message 3 (IT101M03) shall have ATS-message-priority FF. • Message 4 (IT101M04) shall have ATS-message-priority DD. • Message 5 (IT101M05) shall have ATS-message-priority SS. Each message shall have different ATS-filing-time and ATS-message-text. The *optional-heading-information* element shall be empty. Verify the messages received by the remote UA. In particular, verify: • ATS-message-priority, • ATS-message-filing-time, • ATS-message-text.
AMHS ref.: Doc 9880, Part II	3.1 (ATS Message User Agent), 3.2 (ATS Message Server), 3.3.3.7 (ATS-Message-Header)
Related FIRST interoperability test(s)	ITP001/C41/C42
Test class	Normal AMHS communications (N)

4.1.2 IT102 – Submit, transfer and deliver an IPM (UA IUT-B to UA IUT-A)

IT102	**Submit, transfer and deliver an IPM (UA IUT-B to UA IUT-A)**
Test criteria	This test is successful, if the MTA of the sending IUT transfers the submitted ATS messages (IPM) correctly to a peer MTA which delivers the ATS messages (IPM) to the UA of the receiving IUT.
Scenario description	From the UA of IUT-B send a sequence of five ATS messages (IPMs) to the IUT addressing a remote AMHS user in the peer IUT, via AMHS. • Message 1 (IT102M01) shall have ATS-message-priority KK. • Message 2 (IT102M02) shall have ATS-message-priority GG. • Message 3 (IT102M03) shall have ATS-message-priority FF. • Message 4 (IT102M04) shall have ATS-message-priority DD. • Message 5 (IT102M05) shall have ATS-message-priority SS. Each message shall have different ATS-filing-time and ATS-message-text. The *optional-heading-information* element shall be empty. Verify the messages received by the remote UA. In particular, verify: • ATS-message-priority, • ATS-message-filing-time, • ATS-message-text.
AMHS ref.: Doc 9880, Part II	3.1 (ATS Message User Agent), 3.2 (ATS Message Server), 3.3.3.7 (ATS-Message-Header)
Related FIRST interoperability test(s)	ITP001/C41/C42
Test class	Normal AMHS communications (N)

4.2 Gateway Operations (AFTN to AMHS)

4.2.1 IT201 – Convert an AFTN message to AMHS format (IUT-A)

IT201	**Convert an AFTN message to AMHS format (IUT-A)**
Test criteria	This test is successful, if the sending IUT converts AFTN messages correctly to AMHS messages (IPM).
Scenario description	From the sending IUT send a sequence of AFTN messages addressing a remote AMHS user, consisting of five messages: • AFTN message 1 (IT201M01) shall have priority KK. • AFTN message 2 (IT201M02) shall have priority GG. • AFTN message 3 (IT201M03) shall have priority FF. • AFTN message 4 (IT201M04) shall have priority DD. • AFTN message 5 (IT201M05) shall have priority SS. The filing time shall be different in each message and the OHI field of each message shall be empty. Check the IPMs that the AMHS user receives in the receiving IUT. Verify that the IUT has converted the messages correctly according to Table 4-3 of the AMHS technical specifications – see section 4.4.2. In particular: • verify that each message has different ATS-filing-time; • verify that the optional-heading-information element is empty; • check the correct format of the ATS message; • verify the ATS-message-priority and the related message transfer priority for each received message; • compare the ATS-message-text with the original AFTN message text.
AMHS ref.: Doc 9880, Part II	4.4.2
Related FIRST interoperability test(s)	ITP001/C21/C31/C51/C53
Test class	Normal AMHS communications (N)

4.2.2 IT202 – Convert an AFTN message to AMHS format (IUT-B)

IT202	**Convert an AFTN message to AMHS format (IUT-B)**
Test criteria	This test is successful, if the sending IUT converts AFTN messages correctly to AMHS messages (IPM).
Scenario description	From the sending IUT send a sequence of AFTN messages addressing a remote AMHS user, consisting of five messages: • AFTN message 1 (IT202M01) shall have priority KK. • AFTN message 2 (IT202M02) shall have priority GG. • AFTN message 3 (IT202M03) shall have priority FF. • AFTN message 4 (IT202M04) shall have priority DD. • AFTN message 5 (IT202M05) shall have priority SS. The filing time shall be different in each message and the OHI field of each message shall be empty. Check the IPMs that the AMHS user receives in the receiving IUT. Verify that the IUT has converted the messages correctly according to Table 4-3 of the AMHS technical specifications – see section 4.4.2. In particular: • verify that each message has different ATS-filing-time; • verify that the optional-heading-information element is empty; • check the correct format of the ATS message; • verify the ATS-message-priority and the related message transfer priority for each received message; • compare the ATS-message-text with the original AFTN message text.
AMHS ref.: Doc 9880, Part II	4.4.2
Related FIRST interoperability test(s)	ITP001/C21/C31/C51/C53
Test class	Normal AMHS communications (N)

4.3 Gateway Operations (AMHS to AFTN)

4.3.1 IT301 – Convert an IPM generated by the UA of IUT-A to AFTN format

IT301	**Convert an IPM to AFTN format (IUT-B)**
Test criteria	This test is successful, if the receiving IUT converts IPMs correctly into AFTN format.
Scenario description	Send from IUT-A (UA) a sequence of ATS messages (IPMs) to the IUT-B, addressing an AFTN terminal. • Message 1 (IT301M01) shall have ATS-message-priority KK. • Message 2 (IT301M02) shall have ATS-message-priority GG. • Message 3 (IT301M03) shall have ATS-message-priority FF. • Message 4 (IT301M04) shall have ATS-message-priority DD. • Message 5 (IT301M05) shall have ATS-message-priority SS. Each message shall have different ATS-filing-time and ATS-message-text. The *optional-heading-information* element shall be empty. The implicit-conversion-prohibited attribute of the AMHS message must be set to “false”. Check the correct format of the AFTN message. Verify the AFTN priority and filing time for each received message. Compare the AFTN message text with the original ATS-message-text.
AMHS ref.: Doc 9880, Part II	4.5.2 (AMHS IPM conversion)
Related FIRST interoperability test(s)	ITP001/C31/C32/C52/C54
Test class	Normal AMHS communications (N)

4.3.2 IT302 – Convert an IPM generated by the UA of IUT-B to AFTN format

IT302	**Convert an IPM to AFTN format (IUT-A)**
Test criteria	This test is successful, if the receiving IUT converts IPMs correctly into AFTN format.
Scenario description	From the sending IUT send a sequence of ATS messages (IPMs) to the receiving IUT, addressing an AFTN terminal. • Message 1 (IT302M01) shall have ATS-message-priority KK. • Message 2 (IT302M02) shall have ATS-message-priority GG. • Message 3 (IT302M03) shall have ATS-message-priority FF. • Message 4 (IT302M04) shall have ATS-message-priority DD. • Message 5 (IT302M05) shall have ATS-message-priority SS. Each message shall have different ATS-filing-time and ATS-message-text. The *optional-heading-information* element shall be empty. The implicit-conversion-prohibited attribute of the AMHS message must be set to “false”. Check the correct format of the AFTN message. Verify the AFTN priority and filing time for each received message. Compare the AFTN message text with the original ATS-message-text.
AMHS ref.: Doc 9880, Part II	4.5.2 (AMHS IPM conversion)
Related FIRST interoperability test(s)	ITP001/C31/C32/C52/C54
Test class	Normal AMHS communications (N)

4.4 Gateway Operations (AFTN to AMHS to AFTN)

4.4.1 IT401 – Convert an AFTN message to AMHS and back to AFTN format

IT401	**Convert an AFTN message to AMHS and back to AFTN format**
Test criteria	This test is successful, if the sending IUT-A converts AFTN user messages correctly to AMHS messages (IPM) and the IPMs are converted back to AFTN in IUT-B.
Scenario description	From IUT-A send a sequence of AFTN messages addressing a remote AFTN user in IUT-B, consisting of five messages: • AFTN message 1 (IT401M01) shall have priority KK. • AFTN message 2 (IT401M02) shall have priority GG. • AFTN message 3 (IT401M03) shall have priority FF. • AFTN message 4 (IT401M04) shall have priority DD. • AFTN message 5 (IT401M05) shall have priority SS. The filing time shall be different in each message and the OHI field of each message shall be empty. Check the AFTN message received by the AFTN user in the IUT-B. • Check the correct format of the AFTN message. • Each AFTN message shall have original filing time. • Each message shall have an empty OHI. • Verify the AFTN priority for each received message. • Compare the AFTN message text with the original AFTN message text.
AMHS ref.: Doc 9880, Part II	4.4.2, 4.5.2
Related FIRST interoperability test(s)	ITP001/C21/C31/C51/C53
Test class	Normal AMHS communications (N)

4.4.2 IT402 – Convert an AFTN message to AMHS and back to AFTN format

IT402	**Convert an AFTN message to AMHS and back to AFTN format**
Test criteria	This test is successful, if the sending IUT-B converts AFTN user messages correctly to AMHS messages (IPM) and the IPMs are converted back to AFTN in IUT-A.
Scenario description	From IUT-B send a sequence of AFTN messages addressing a remote AFTN user in IUT-A, consisting of five messages: • AFTN message 1 (IT402M01) shall have priority KK. • AFTN message 2 (IT402M02) shall have priority GG. • AFTN message 3 (IT402M03) shall have priority FF. • AFTN message 4 (IT402M04) shall have priority DD. • AFTN message 5 (IT402M05) shall have priority SS. The filing time shall be different in each message and the OHI field of each message shall be empty. Check the AFTN message received by the AFTN user in the IUT-A. • Check the correct format of the AFTN message. • Each AFTN message shall have original filing time. • Each message shall have an empty OHI. • Verify the AFTN priority for each received message. • Compare the AFTN message text with the original AFTN message text.
AMHS ref.: Doc 9880, Part II	4.4.2, 4.5.2
Related FIRST interoperability test(s)	ITP001/C21/C31/C51/C53
Test class	Normal AMHS communications (N)

4.5 Gateway Operations – special case scenarios

Note – The following special case scenarios are symmetric. That means, all test-cases have to be performed by IUT-A as well as IUT-B.

4.5.1 IT501 – Distribute an IPM to AMHS and AFTN users

IT501	**Distribute an IPM to AMHS and AFTN users**
Test criteria	This test is successful, if the receiving IUT distributes an IPM addressing both an AMHS and an AFTN user correctly.
Scenario description	From the sending IUT send an ATS message (IPM), addressing both AMHS and AFTN users, at the receiving IUT. The IPM Heading of the message shall contain two primary recipients, which are one AMHS and one AFTN user. The IPM Heading of the next message shall contain additionally, two copy recipients, which are also one AMHS and one AFTN user. Finally the IPM Heading of the last message shall contain additionally two blind copy recipients, which are also one AMHS and one AFTN user. Verify that all the users, whose addresses have been included in the IPM, receive the message correctly.
AMHS ref.: Doc 9880, Part II	3.1 (ATS message user agent), 3.2 (ATS message server), 4.5.2 (IPM conversion)
Related FIRST interoperability test(s)	ITP053/C51/C52/C53/C54/C55/C56
Test class	Normal AMHS communications (N)

4.5.2 IT502 – Expand a DL addressing both AMHS and AFTN users

IT502	**Expand a DL addressing both AMHS and AFTN users**
Test criteria	This test is successful, if the receiving IUT distributes an IPM, addressing AMHS and AFTN users in a distribution list, correctly.
Scenario description	From the sending IUT send an ATS message (IPM) to the receiving IUT. The recipient contained in the MTE addresses a distribution list, for which the receiving IUT is responsible. The distribution list shall have the addresses of one AMHS user and two AFTN users as members. The message shall have the *dl-expansion-prohibited* attribute set to "false". Check the messages received in each AFTN user address verifying that each one contains its corresponding address.
AMHS ref.: Doc 9880, Part II	3.2.2.1 (DL functional group), 4.5.2 (IPM conversion)
Related FIRST interoperability test(s)	ITP055/C51/C52, ITP057/C51/C52
Test class	Normal AMHS communications (N)

4.5.3 IT503 – Convert an IPM, if the ATS-message-text contains more than 1800 characters

IT503	**Convert or reject an IPM, if the ATS-message-text contains more than 1800 characters**
Test criteria	This test is successful, if the IUT, when it receives an ATS message with ATS-message-text longer than 1800 characters, a) rejects the message and returns a NDR, or b) splits the received IPM into several messages and converts the resulting messages into AFTN format as specified in ICAO Annex 10, Attm. B [1], or c) converts the received IPM into a "long" AFTN message. *Note. – The AMHS technical specifications (4.5.2.1.7) specify that the message can be rejected (case a) or split into several messages (case b).*
Scenario description	From the sending IUT send an ATS message (IPM) containing ATS-message-text of 4500 characters to an AFTN recipient of the receiving IUT. *If case a is implemented:* Verify that the receiving IUT does not convert the IPM into AFTN format, but returns a NDR. Check the NDR contents received at the sending User Agent. Verify that the NDR contains the following elements: • "unable-to-transfer" for the *non-delivery-reason-code*; • "content-too-long" for the *non-delivery-diagnostic-code*; and • "unable to convert to AFTN due to message text length" for the *supplementary-information*. *If case b is implemented:* Verify that (at least) three AFTN messages are received by the AFTN recipient. Check the correct format of the AFTN messages. Check the text field of all received AFTN messages. Verify that the text is complete and unchanged, i.e. compare the received data with the *ATS-message-text* provided in the original IPM. Verify that the received messages contain the sequence indicators as specified in Attm. B of ICAO Annex 10, Vol. II [1]. *If case c is implemented:* Verify that the AFTN message is received by the AFTN recipient. Check the correct format of the received AFTN message. Verify that the text is complete and unchanged, i.e. compare the received data with the *ATS-message-text* provided in the original IPM.
AMHS ref.: Doc 9880, Part II	4.5.2.1.7
Related FIRST interoperability test(s)	ITP007/C31/C32/C51/C52
Test class	Normal AMHS communications (N)

4.5.4 IT504 – Split an incoming IPM addressing more than 21 AFTN users

IT504	**Split an incoming IPM addressing more than 21 AFTN users**
Test criteria	This test is successful, if the receiving IUT receives an ATS message (IPM) addressing more than 21 AFTN users and splits the received IPM into several messages each addressing 21 or less AFTN users. *Note. – PDR M4050004 (Title: AMHS - Too Many Recipients) is resolved. Therefore the message shall be split into several messages.*
Scenario description	From the sending IUT send an ATS message (IPM) to the receiving IUT. The message shall address 50 (primary) recipients. Verify that the receiving IUT converts the IPM into AFTN format and sends three AFTN messages to its AFTN component. Check the addressee indicators contained in the AFTN messages. Verify that no AFTN recipient is lost and the total number of AFTN addressee indicators contained in all three messages is 50. For example: • the first AFTN message contains addressee indicators for the first 21 recipients, • the second AFTN message contains addressee indicators for the next 21 recipients, and • the third AFTN message contains addressee indicators for the remaining 8 recipients.
AMHS ref.: Doc 9880, Part II	4.5.2.1.8
Related FIRST interoperability test(s)	ITP008/C31/C32
Test class	Normal AMHS communications (N)

4.5.5 IT505 – Probe Conveyance Test

IT505	**Probe Conveyance Test**
Test criteria	This test is successful, if the receiving IUT generates appropriate reports, when it receives probes.
Scenario description	From the sending IUT, send AMHS probes to the receiving IUT: a) containing 3 recipient O/R addresses, two of which belonging to AFTN users, the third one belonging to an AMHS user, b) containing 3 recipient O/R addresses, one of which belonging to an AFTN user, the two others routed to the MTCU in the target IUT as well, but not convertible into AFTN addresses. Verify that the receiving IUT returns a. one DR with 2 AFTN recipients from the MTCU and one DR with one recipient from the MTA b. a combined DR and NDR or one DR and one NDR in response to the probe received. Verify in all cases that the DRs reporting about the AFTN addresses which could be translated contains the supplementary information “This report only indicates successful (potential) conversion to AFTN, not delivery to a recipient”.
AMHS ref.: Doc 9880, Part II	4.5.5 (reception of AMHS probe), 4.5.6.2.27
Related FIRST interoperability test(s)	ITP066/C51/C52
Test class	Normal AMHS communications (N)

4.6 Stress traffic situations

4.6.1 IT601 – Stress load

IT601	**Stress load**
Test criteria	This test is successful, if both IUTs perform AMHS traffic interchange correctly for a number of messages queued in advance.
Scenario description	Defined numbers of messages (beginning with100, 200, till 400 messages) have to be selected from the data base or generated by the UA or the AFTN terminal. These messages need to be queued (in MTAs) in both IUTs, preferably by disabling the physical connector used to send information to the underlying network in one of the IUTs. When reconnecting, the messages queued in both IUTs will be sent simultaneously from the two sites, the rate being defined by the line speed of the interconnection, as well as the process followed by each system. No errors due to malfunction of the IUTs should be observed during the interchange period. The time from sending the first till receiving the last message has to be measured and analysed in both IUTs.
AMHS ref.: Doc 9880, Part II	None
Related FIRST interoperability test(s)	None
Test class	Normal (forced) AMHS communications (N)

5. Trilateral Test procedures - optional

5.1 Submission/Transfer/Delivery and Relay operations

5.1.1 IT701 – Submission /Transfer/Delivery between the partner MTAs

IT701	**Submission / Transfer / Delivery between the partner MTAs**
Test criteria	This test is successful, if the messages from all UAs are received by the corresponding UAs of the other the IUTs.
Scenario description	Create a "normal" X.400 routing: (see 3.3, AFTN and X.400 Routing Tables) From the UA send an ATS message (IPM) with ATS-message-priority FF addressed to the UA of the other IUTs. • Message 1 (IT701M01) from UA IUT-A to UAs of IUT-B and IUT-C • Message 2 (IT701M02) from UA IUT-B to UAs of IUT-A and IUT-C. • Message 3 (IT701M03) from UA IUT-C to UAs of IUT-A and IUT-B. Each message shall have different ATS-filing-time and ATS-message-text. The *optional-heading-information* element shall be empty. Verify the messages received by both remote UAs. In particular, verify: • ATS-message-priority, • ATS-message-filing-time, • ATS-message-text.
AMHS ref.: Doc 9880, Part II	None
Related FIRST interoperability test(s)	None
Test class	Normal AMHS communications (N)

5.1.2 IT702 – Relay operations

IT702	**Relay operations**
Test criteria	This test is successful, if the message from the sending UA is routed by the IUT in between and received by the addressed UA.
Scenario description	Create a "transfer" X.400 routing: The X.400 routing table of IUT-A routes PRMD=IUTLAND-B and PRMD=IUTLAND-C to IUT-B. The X.400 routing table of IUT-B routes PRMD=IUTLAND-A and PRMD=IUTLAND-C to IUT-C. The X.400 routing table of IUT-C routes PRMD=IUTLAND-A and PRMD=IUTLAND-B to IUT-A. From the UA send an ATS message (IPM) with ATS-message-priority FF to one UA of another IUT. • Message 1 (IT702M01) from UA IUT-A to UA of IUT-C • Message 2 (IT702M02) from UA IUT-B to UA of IUT-A. • Message 3 (IT702M03) from UA IUT-C to UA of IUT-B. Each message shall have different ATS-filing-time and ATS-message-text. The *optional-heading-information* element shall be empty. Verify the messages received by the remote UA and passed the IUT in between. In particular, verify: • ATS-message-priority, • ATS-message-filing-time, • ATS-message-text.
AMHS ref.: Doc 9880, Part II	None
Related FIRST interoperability test(s)	None
Test class	Normal AMHS communications (N)

5.2 Test of special situations

5.2.1 IT801 – Alternate MTA routing

IT801	Alternate MTA routing
Test criteria	This test is successful, if the message from the sending UA is received by the addressed UA
Scenario description	Create a "normal" X.400 routing: (see 3.3, AFTN and X.400 Routing Tables) Cut the direct connection to the IUT to which you intend to send a message. From the UA send an ATS message (IPM) with ATS-message-priority FF to the UA of the IUT concerned. • Message 1 (IT801M01) from UA IUT-A to UA of IUT-B • Message 2 (IT801M02) from UA IUT-B to UAs of IUT-C. • Message 3 (IT801M03) from UA IUT-C to UAs of IUT-A. Each message shall have different ATS-filing-time and ATS-message-text. The *optional-heading-information* element shall be empty. If alternate MTA routing functionality is implemented and configured the message will be forwarded automatically via the "other" connection; otherwise the queued message should be forced to follow the alternate routing by the adequate means (manually). Verify the messages received by the remote UA and passed the IUT in between. In particular, verify: • ATS-message-priority, • ATS-message-filing-time, • ATS-message-text.
AMHS ref.: Doc 9880, Part II	None
Related FIRST interoperability test(s)	None
Test class	Normal AMHS communications (N)

5.2.2 IT802– Loop detection

IT802	**Loop detection**
Test criteria	This test is successful; if each of the three IUTs proves its capability to detect that a message has traversed a loop, regardless from which IUT the message has been submitted.
Scenario description	Create a temporary routing loop. The X.400 routing table of IUT-A routes PRMD=IUTLAND-X to IUT-B. The X.400 routing table of IUT-B routes PRMD=IUTLAND-X to IUT-C. The X.400 routing table of IUT-C routes PRMD=IUTLAND-X to IUT-A. Subsequently set the loop detection parameters in the three IUTs in that way that at first IUT-A, then IUT-B and finally IUT-C will detect the loop. With each setting of the loop detection parameters send messages addressed to IUTXLOOP from UAs in each IUT. Due to the routing table settings the messages will perform loops. Verify that: • the IUT which is configured to detect the loop really detects it, • this IUT discards the message and • generates a NDR Verify that the sending UA receives the NDR.
AMHS ref.: Doc 9880, Part II	1.1.3 (ISO/IEC 10021), 2.6 (AMHS routing), *See also ITU-T Rec. X.411 clause 14.3.1 and clause 12.3.1.*
Related FIRST interoperability test(s)	*Note. – The FIRST bilateral tests [6], [7] are not related to transfer operations.*
Test class	MHS procedural errors (E2)

6. Bilateral Test Procedures – Test Scenarios

6.1 Introduction

The following tables contain the scenarios for the different Interoperability Tests (IT) described in the previous chapters.

The test scenarios consist of several test-cases. The test-case reference is as follows:

ITxxx/TCzz

Test scenario:	ITxxx	where xxx is the scenario number
Test-case:	TCzz	where zz is the number of test-case.

6.2 Submission, Transfer and Delivery Operation (AMHS to AMHS)

IT101	**Submit, transfer and deliver an IPM (UA IUT-A to UA IUT-B)**		
Test-case id: **IT101/TC01**	Tested functionality: Submission, transfer and delivery of messages with different ATS-message-priorities A KK priority message will be submitted from the UA of IUT-A and delivered to the UA of IUT-B.		
Test description:	From the User Agent IUTAMHSA send the following message to the UA IUTBMHSA: PRI: KK FT: <FT> OHI: TEST IT101/TC01 Get the message with IUTBMHSA (UA-terminal of IUT-B).		
Test control:	Check the correct reception of the message at the UA IUTBMHSA of the IUT-B system. Check - the ATS-message-priority: PRI: KK - the ATS-message-filing-time and - the ATS-message-text		
Test result:	**PASS**	**FAILED**	**INCONCLUSIVE**

IT101	**Submit, transfer and deliver an IPM (UA IUT-A to UA IUT-B)**		
Test-case id: **IT101/TC02**	Tested functionality: Submission, transfer and delivery of messages with different ATS-message-priorities A GG priority message will be submitted from the UA of IUT-A and delivered to the UA of IUT-B.		
Test description:	From the User Agent IUTAMHSA send the following message to the UA IUTBMHSA: PRI: GG FT: <FT> OHI: TEST IT101/TC02 Get the message with IUTBMHSA (UA-terminal of IUT-B).		
Test control:	Check the correct reception of the message at the UA IUTBMHSA of the IUT-B system. Check - the ATS-message-priority: PRI: GG - the ATS-message-filing-time and - the ATS-message-text		
Test result:	**PASS**	**FAILED**	**INCONCLUSIVE**

IT101	**Submit, transfer and deliver an IPM (UA IUT-A to UA IUT-B)**		
Test-case id: **IT101/TC03**	Tested functionality: Submission, transfer and delivery of messages with different ATS-message-priorities An FF priority message will be submitted from the UA of IUT-A and delivered to the UA of IUT-B.		
Test description:	From the User Agent IUTAMHSA send the following message to the UA IUTBMHSA: PRI: FF FT: <FT> OHI: TEST IT101/TC03 Get the message with IUTBMHSA (UA-terminal of IUT-B).		
Test control:	Check the correct reception of the message at the UA IUTBMHSA of the IUT-B system. Check - the ATS-message-priority: PRI: FF - the ATS-message-filing-time and - the ATS-message-text		
Test result:	**PASS**	**FAILED**	**INCONCLUSIVE**

IT101	**Submit, transfer and deliver an IPM (UA IUT-A to UA IUT-B)**		
Test-case id: **IT101/TC04**	Tested functionality: Submission, transfer and delivery of messages with different ATS-message-priorities A DD priority message will be submitted from the UA of IUT-A and delivered to the UA of IUT-B.		
Test description:	From the User Agent IUTAMHSA send the following message to the UA IUTBMHSA: PRI: DD FT: <FT> OHI: TEST IT101/TC04 Get the message with IUTBMHSA (UA-terminal of IUT-B).		
Test control:	Check the correct reception of the message at the UA IUTBMHSA of the IUT-B system. Check - the ATS-message-priority: PRI: DD - the ATS-message-filing-time and - the ATS-message-text		
Test result:	**PASS**	**FAILED**	**INCONCLUSIVE**

IT101	**Submit, transfer and deliver an IPM (UA IUT-A to UA IUT-B)**		
Test-case id: **IT101/TC05**	Tested functionality: Submission, transfer and delivery of messages with different ATS-message-priorities An SS priority message will be submitted from the UA of IUT-A and delivered to the UA of IUT-B.		
Test description:	From the User Agent IUTAMHSA send the following message to the UA IUTBMHSA: PRI: SS FT: <FT> OHI: TEST IT101/TC05 Get the message with IUTBMHSA (UA-terminal of IUT-B). A RN is submitted when the message is displayed. *Note. – Depending on UA implementation the user might be requested to send the RN.*		
Test control:	Check the correct reception of the message at the UA IUTBMHSA of the IUT-B system. Check - the ATS-message-priority: PRI: SS - the ATS-message-filing-time and - the ATS-message-text Check the reception of a RN on the UA IUTAMHSA of the IUT-A system.		
Test result:	**PASS**	**FAILED**	**INCONCLUSIVE**

IT102	**Submit, transfer and deliver an IPM (UA IUT-B to UA IUT-A)**		
Test-case id: **IT102/TC01**	Tested functionality: Submission, transfer and delivery of messages with different ATS-message-priorities A KK priority message will be submitted from the UA of IUT-B and delivered to the UA of IUT-A.		
Test description:	From the User Agent IUTBMHSA send the following message to the UA IUTAMHSA: PRI: KK FT: <FT> OHI: TEST IT102/TC01 Get the message with IUTAMHSA (UA-terminal of IUT-A).		
Test control:	Check the correct reception of the message at the UA IUTAMHSA of the IUT-A system. Check - the ATS-message-priority: PRI: KK - the ATS-message-filing-time and - the ATS-message-text		
Test result:	**PASS**	**FAILED**	**INCONCLUSIVE**

IT102	**Submit, transfer and deliver an IPM (UA IUT-B to UA IUT-A)**		
Test-case id: **IT102/TC02**	Tested functionality: Submission, transfer and delivery of messages with different ATS-message-priorities A GG priority message will be submitted from the UA of IUT-B and delivered to the UA of IUT-A.		
Test description:	From the User Agent IUTBMHSA send the following message to the UA IUTAMHSA: PRI: GG FT: <FT> OHI: TEST IT102/TC02 Get the message with IUTAMHSA (UA-terminal of IUT-A).		
Test control:	Check the correct reception of the message at the UA IUTAMHSA of the IUT-A system. Check - the ATS-message-priority: PRI: GG - the ATS-message-filing-time and - the ATS-message-text		
Test result:	**PASS**	**FAILED**	**INCONCLUSIVE**

IT102	**Submit, transfer and deliver an IPM (UA IUT-B to UA IUT-A)**		
Test-case id: **IT102/TC03**	Tested functionality: Submission, transfer and delivery of messages with different ATS-message-priorities An FF priority message will be submitted from the UA of IUT-B and delivered to the UA of IUT-A.		
Test description:	From the User Agent IUTBMHSA send the following message to the UA IUTAMHSA: PRI: FF FT: <FT> OHI: TEST IT102/TC03 Get the message with IUTAMHSA (UA-terminal of IUT-A).		
Test control:	Check the correct reception of the message at the UA IUTAMHSA of the IUT-A system. Check - the ATS-message-priority: PRI: FF - the ATS-message-filing-time and - the ATS-message-text		
Test result:	**PASS**	**FAILED**	**INCONCLUSIVE**

IT102	**Submit, transfer and deliver an IPM (UA IUT-B to UA IUT-A)**		
Test-case id: **IT102/TC04**	Tested functionality: Submission, transfer and delivery of messages with different ATS-message-priorities A DD priority message will be submitted from the UA of IUT-B and delivered to the UA of IUT-A.		
Test description:	From the User Agent IUTBMHSA send the following message to the UA IUTAMHSA: PRI: DD FT: <FT> OHI: TEST IT102/TC04 Get the message with IUTAMHSA (UA-terminal of IUT-A)		
Test control:	Check the correct reception of the message at the UA IUTAMHSA of the IUT-A system. Check - the ATS-message-priority: PRI: DD - the ATS-message-filing-time and - the ATS-message-text		
Test result:	**PASS**	**FAILED**	**INCONCLUSIVE**

IT102	**Submit, transfer and deliver an IPM (UA IUT-B to UA IUT-A)**		
Test-case id: **IT102/TC05**	Tested functionality: Submission, transfer and delivery of messages with different ATS-message-priorities An SS priority message will be submitted from the UA of IUT-B and delivered to the UA of IUT-A.		
Test description:	From the User Agent IUTBMHSA send the following message to the UA IUTAMHSA: PRI: SS FT: <FT> OHI: TEST IT102/TC05 Get the message with IUTAMHSA (UA-terminal of IUT-A). A RN is submitted when the message is displayed. *Note. – Depending on UA implementation the user might be requested to send the RN.*		
Test control:	Check the correct reception of the message at the UA IUTAMHSA of the IUT-A system. Check - the ATS-message-priority: PRI: SS - the ATS-message-filing-time and - the ATS-message-text Check the reception of a RN on the UA IUTBMHSA of the IUT-B system.		
Test result:	**PASS**	**FAILED**	**INCONCLUSIVE**

6.3 Gateway Operations (AFTN to AMHS)

IT201	**Convert an AFTN message to AMHS format (IUT-A)**		
Test-case id: **IT201/TC01**	Tested functionality: Conversion of messages with different AFTN priorities A KK priority message will be sent from the AFTN terminal of IUT-A, converted to AMHS and received at the UA of IUT-B.		
Test description:	From the AFTN terminal IUTAFTNA of IUT-A send the following message to the User Agent (UA) of IUT-B: KK IUTBMHSA <FT> IUTAFTNA TEST IT201/TC01 The message is converted from AFTN into AMHS format in the MTCU of IUT-A.		
Test control:	Check the correct reception of the message at the UA IUTBMHSA of the IUT-B system. Check - the ATS-message-priority: PRI: KK - the message transfer priority: NON URGENT - the ATS-message-filing-time and - the ATS-message-text		
Test result:	**PASS**	**FAILED**	**INCONCLUSIVE**

IT201	**Convert an AFTN message to AMHS format (IUT-A)**		
Test-case id: **IT201/TC02**	Tested functionality: Conversion of messages with different AFTN priorities A GG priority message will be sent from the AFTN terminal of IUT-A, converted to AMHS and received at the UA of IUT-B.		
Test description:	From the AFTN terminal IUTAFTNA of IUT-A send the following message to the User Agent (UA) of IUT-B: GG IUTBMHSA <FT> IUTAFTNA TEST IT201/TC02 The message is converted from AFTN into AMHS format in the MTCU of IUT-A.		
Test control:	Check the correct reception of the message at the UA IUTBMHSA of the IUT-B system. Check - the ATS-message-priority: PRI: GG - the message transfer priority: NON URGENT - the ATS-message-filing-time and - the ATS-message-text		
Test result:	**PASS**	**FAILED**	**INCONCLUSIVE**

IT201	**Convert an AFTN message to AMHS format (IUT-A)**		
Test-case id: **IT201/TC03**	Tested functionality: Conversion of messages with different AFTN priorities An FF priority message will be sent from the AFTN terminal of IUT-A, converted to AMHS and received at the UA of IUT-B.		
Test description:	From the AFTN terminal IUTAFTNA of IUT-A send the following message to the User Agent (UA) of IUT-B: FF IUTBMHSA <FT> IUTAFTNA TEST IT201/TC03 The message is converted from AFTN into AMHS format in the MTCU of IUT-A.		
Test control:	Check the correct reception of the message at the UA IUTBMHSA of the IUT-B system. Check - the ATS-message-priority: PRI: FF - the message transfer priority: NORMAL - the ATS-message-filing-time and - the ATS-message-text		
Test result:	**PASS**	**FAILED**	**INCONCLUSIVE**

IT201	**Convert an AFTN message to AMHS format (IUT-A)**		
Test-case id: **IT201/TC04**	Tested functionality: Conversion of messages with different AFTN priorities A DD priority message will be sent from the AFTN terminal of IUT-A, converted to AMHS and received at the UA of IUT-B.		
Test description:	From the AFTN terminal IUTAFTNA of IUT-A send the following message to the User Agent (UA) of IUT-B: DD IUTBMHSA <FT> IUTAFTNA TEST IT201/TC04 The message is converted from AFTN into AMHS format in the MTCU of IUT-A.		
Test control:	Check the correct reception of the message at the UA IUTBMHSA of the IUT-B system. Check - the ATS-message-priority: PRI: DD - the message transfer priority: NORMAL - the ATS-message-filing-time and - the ATS-message-text		
Test result:	**PASS**	**FAILED**	**INCONCLUSIVE**

IT201	**Convert an AFTN message to AMHS format (IUT-A)**		
Test-case id: **IT201/TC05**	Tested functionality: Conversion of messages with different AFTN priorities An SS priority message will be sent from the AFTN terminal of IUT-A, converted to AMHS and received at the UA of IUT-B.		
Test description:	From the AFTN terminal IUTAFTNA of IUT-A send the following message to the User Agent (UA) of IUT-B: SS IUTBMHSA <FT> IUTAFTNA TEST IT201/TC05 The message is converted from AFTN into AMHS format in the MTCU of IUT-A. *Optional:* *Generate a RN at the receiving UA IUTBMHSA of ITU-B.*		
Test control:	Check the correct reception of the message at the UA IUTBMHSA of the IUT-B system. Check - the ATS-message-priority: PRI: SS - the message transfer priority: URGENT - the ATS-message-filing-time and - the ATS-message-text *Optional:* *If a RN is replied from the UA IUTBMHSA of ITU-B, the MTCU of IUT-A converts it into an SS Ack message which is sent to the AFTN terminal of IUT-A.* *Check the reception of the SS Ack message at the AFTN terminal IUTAFTNA of IUT-A. .Its originator indicator shall be the AFTN address IUTBMHSA, and its text shall be "R <FT> IUTAFTNA", where <FT> denotes the filing time of the subject AFTN message.*		
Test result:	**PASS**	**FAILED**	**INCONCLUSIVE**

IT202	**Convert an AFTN message to AMHS format (IUT-B)**		
Test-case id: **IT202/TC01**	Tested functionality: Conversion of messages with different AFTN priorities A KK priority message will be sent from the AFTN terminal of IUT-B, converted to AMHS and received at the UA of IUT-A.		
Test description:	From the AFTN terminal IUTBFTNA of IUT-B send the following message to the User Agent (UA) of IUT-A: KK IUTAMHSA <FT> IUTBFTNA TEST IT202/TC01 The message is converted from AFTN into AMHS format in the MTCU of IUT-B.		
Test control:	Check the correct reception of the message at the UA IUTAMHSA of the IUT-A system. Check - the ATS-message-priority: PRI: KK - the message transfer priority: NON URGENT - the ATS-message-filing-time and - the ATS-message-text		
Test result:	**PASS**	**FAILED**	**INCONCLUSIVE**

IT202	**Convert an AFTN message to AMHS format (IUT-B)**		
Test-case id: **IT202/TC02**	Tested functionality: Conversion of messages with different AFTN priorities A GG priority message will be sent from the AFTN terminal of IUT-B, converted to AMHS and received at the UA of IUT-A.		
Test description:	From the AFTN terminal IUTBFTNA of IUT-B send the following message to the User Agent (UA) of IUT-A: GG IUTAMHSA <FT> IUTBFTNA TEST IT202/TC02 The message is converted from AFTN into AMHS format in the MTCU of IUT-B.		
Test control:	Check the correct reception of the message at the UA IUTAMHSA of the IUT-A system. Check - the ATS-message-priority: PRI: GG - the message transfer priority: NON URGENT - the ATS-message-filing-time and - the ATS-message-text		
Test result:	**PASS**	**FAILED**	**INCONCLUSIVE**

IT202	**Convert an AFTN message to AMHS format (IUT-B)**		
Test-case id: **IT202/TC03**	Tested functionality: Conversion of messages with different AFTN priorities An FF priority message will be sent from the AFTN terminal of IUT-B, converted to AMHS and received at the UA of IUT-A.		
Test description:	From the AFTN terminal IUTBFTNA of IUT-B send the following message to the User Agent (UA) of IUT-A: FF IUTAMHSA <FT> IUTBFTNA TEST IT202/TC03 The message is converted from AFTN into AMHS format in the MTCU of IUT-B.		
Test control:	Check the correct reception of the message at the UA IUTAMHSA of the IUT-A system. Check - the ATS-message-priority: PRI: FF - the message transfer priority: NORMAL - the ATS-message-filing-time and - the ATS-message-text		
Test result:	**PASS**	**FAILED**	**INCONCLUSIVE**

IT202	**Convert an AFTN message to AMHS format (IUT-B)**		
Test-case id: **IT202/TC04**	Tested functionality: Conversion of messages with different AFTN priorities A DD priority message will be sent from the AFTN terminal of IUT-B, converted to AMHS and received at the UA of IUT-A.		
Test description:	From the AFTN terminal IUTBFTNA of IUT-B send the following message to the User Agent (UA) of IUT-A: DD IUTAMHSA <FT> IUTBFTNA TEST IT202/TC04 The message is converted from AFTN into AMHS format in the MTCU of IUT-B.		
Test control:	Check the correct reception of the message at the UA IUTAMHSA of the IUT-A system. Check - the ATS-message-priority: PRI: DD - the message transfer priority: NORMAL - the ATS-message-filing-time and - the ATS-message-text		
Test result:	**PASS**	**FAILED**	**INCONCLUSIVE**

IT202	**Convert an AFTN message to AMHS format (IUT-B)**		
Test-case id: **IT202/TC05**	Tested functionality: Conversion of messages with different AFTN priorities An SS priority message will be sent from the AFTN terminal of IUT-B, converted to AMHS and received at the UA of IUT-A.		
Test description:	From the AFTN terminal IUTBFTNA of IUT-B send the following message to the User Agent (UA) of IUT-A: SS IUTAMHSA <FT> IUTBFTNA TEST IT202/TC05 The message is converted from AFTN into AMHS format in the MTCU of IUT-B. *Optional:* *Generate a RN at the receiving UA IUTAMHSA of ITU-A.*		
Test control:	Check the correct reception of the message at the UA IUTAMHSA of the IUT-A system. Check - the ATS-message-priority: PRI: SS - the message transfer priority: URGENT - the ATS-message-filing-time and - the ATS-message-text *Optional:* *If a RN is replied from the UA IUTAMHSA of ITU-A, the MTCU of IUT-B converts it into an SS Ack message which is sent to the AFTN terminal of IUT-B.* *Check the reception of the SS Ack message at the AFTN terminal IUTBFTNA of IUT-B. Its originator indicator shall be the AFTN address IUTAMHSA, and its text shall be "R <FT> IUTBFTNA", where <FT> denotes the filing time of the subject AFTN message.*		
Test result:	**PASS**	**FAILED**	**INCONCLUSIVE**

6.4 Gateway Operations (AMHS to AFTN)

IT301	**Convert an IPM to AFTN format (IUT-B)**		
Test-case id: **IT301/TC01**	Tested functionality: Conversion of messages with different ATS-message-priorities A KK priority message will be submitted from the UA of IUT-A, converted to AFTN in IUT-B and received at the AFTN terminal of IUT-B.		
Test description:	From the User Agent IUTAMHSA send the following message to the AFTN terminal IUTBFTNA of IUT-B: PRI: KK FT: <FT> OHI: TEST IT301/TC01 The message is converted from AMHS into AFTN format in the MTCU of IUT-B.		
Test control:	Check the correct reception of the message at the AFTN terminal IUTBFTNA of the IUT-B system. Check - the AFTN priority: KK - the AFTN filing time and - the AFTN message text		
Test result:	**PASS**	**FAILED**	**INCONCLUSIVE**

IT301	**Convert an IPM to AFTN format (IUT-B)**		
Test-case id: **IT301/TC02**	Tested functionality: Conversion of messages with different ATS-message-priorities A GG priority message will be submitted from the UA of IUT-A, converted to AFTN in IUT-B and received at the AFTN terminal of IUT-B.		
Test description:	From the User Agent IUTAMHSA send the following message to the AFTN terminal IUTBFTNA of IUT-B: PRI: GG FT: <FT> OHI: TEST IT301/TC02 The message is converted from AMHS into AFTN format in the MTCU of IUT-B.		
Test control:	Check the correct reception of the message at the AFTN terminal IUTBFTNA of the IUT-B system. Check - the AFTN priority: GG - the AFTN filing time and - the AFTN message text		
Test result:	**PASS**	**FAILED**	**INCONCLUSIVE**

IT301	**Convert an IPM to AFTN format (IUT-B)**		
Test-case id: **IT301/TC03**	Tested functionality: Conversion of messages with different ATS-message-priorities An FF priority message will be submitted from the UA of IUT-A, converted to AFTN in IUT-B and received at the AFTN terminal of IUT-B.		
Test description:	From the User Agent IUTAMHSA send the following message to the AFTN terminal IUTBFTNA of IUT-B: PRI: FF FT: <FT> OHI: TEST IT301/TC03 The message is converted from AMHS into AFTN format in the MTCU of IUT-B.		
Test control:	Check the correct reception of the message on the AFTN terminal IUTBFTNA of the IUT-B system. Check - the AFTN priority: FF - the AFTN filing time and - the AFTN message text		
Test result:	**PASS**	**FAILED**	**INCONCLUSIVE**

IT301	**Convert an IPM to AFTN format (IUT-B)**		
Test-case id: **IT301/TC04**	Tested functionality: Conversion of messages with different ATS-message-priorities A DD priority message will be submitted from the UA of IUT-A, converted to AFTN in IUT-B and received at the AFTN terminal of IUT-B.		
Test description:	From the User Agent IUTAMHSA send the following message to the AFTN terminal IUTBFTNA of IUT-B: PRI: DD FT: <FT> OHI: TEST IT301/TC04 The message is converted from AMHS into AFTN format in the MTCU of IUT-B.		
Test control:	Check the correct reception of the message on the AFTN terminal IUTBFTNA of the IUT-B system. Check - the AFTN priority: DD - the AFTN filing time and - the AFTN message text		
Test result:	**PASS**	**FAILED**	**INCONCLUSIVE**

IT301	**Convert an IPM to AFTN format (IUT-B)**		
Test-case id: **IT301/TC05**	Tested functionality: Conversion of messages with different ATS-message-priorities An SS priority message will be submitted from the UA of IUT-A, converted to AFTN in IUT-B and received at the AFTN terminal of IUT-B		
Test description:	From the User Agent IUTAMHSA send the following message to the AFTN terminal IUTBFTNA of IUT-B: PRI: SS FT: <FT> OHI: TEST IT301/TC05 The message is converted from AMHS into AFTN format in the MTCU of IUT-B. *Optional:* *Send an SS Acknowledgement message from the receiving AFTN terminal.*		
Test control:	Check the correct reception of the message on the AFTN terminal IUTBFTNA of the IUT-B system. Check - the AFTN priority: SS - the AFTN filing time and - the AFTN message text *Optional:* *When the SS Ack message is replied, the MTCU of IUT-B converts it into a RN.* *Check the reception of the RN at the UA IUTAMHSA of ITU-A.*		
Test result:	**PASS**	**FAILED**	**INCONCLUSIVE**

IT302	**Convert an IPM to AFTN format (IUT-A)**		
Test-case id: **IT302/TC01**	Tested functionality: Conversion of messages with different ATS-message-priorities A KK priority message will be submitted from the UA of IUT-B, converted to AFTN in IUT-A and received at the AFTN terminal of IUT-A.		
Test description:	From the User Agent IUTBMHSA send the following message to the AFTN terminal IUTAFTNA of IUT-A: PRI: KK FT: <FT> OHI: TEST IT302/TC01 The message is converted from AMHS into AFTN format in the MTCU of IUT-A.		
Test control:	Check the correct reception of the message on the AFTN terminal IUTAFTNA of the IUT-A system. Check - the AFTN priority: KK - the AFTN filing time and - the AFTN message text		
Test result:	**PASS**	**FAILED**	**INCONCLUSIVE**

IT302	**Convert an IPM to AFTN format (IUT-A)**		
Test-case id: **IT302/TC02**	Tested functionality: Conversion of messages with different ATS-message-priorities A GG priority message will be submitted from the UA of IUT-B, converted to AFTN in IUT-A and received at the AFTN terminal of IUT-A.		
Test description:	From the User Agent IUTBMHSA send the following message to the AFTN terminal IUTAFTNA of IUT-A: PRI: GG FT: <FT> OHI: TEST IT302/TC02 The message is converted from AMHS into AFTN format in the MTCU of IUT-A.		
Test control:	Check the correct reception of the message on the AFTN terminal IUTAFTNA of the IUT-A system. Check - the AFTN priority: GG - the AFTN filing time and - the AFTN message text		
Test result:	**PASS**	**FAILED**	**INCONCLUSIVE**

IT302	**Convert an IPM to AFTN format (IUT-A)**		
Test-case id: **IT302/TC03**	Tested functionality: Conversion of messages with different ATS-message-priorities An FF priority message will be submitted from the UA of IUT-B, converted to AFTN in IUT-A and received at the AFTN terminal of IUT-A.		
Test description:	From the User Agent IUTBMHSA send the following message to the AFTN terminal IUTAFTNA of IUT-A: PRI: FF FT: <FT> OHI: TEST IT302/TC03 The message is converted from AMHS into AFTN format in the MTCU of IUT-A.		
Test control:	Check the correct reception of the message on the AFTN terminal IUTAFTNA of the IUT-A system. Check - the AFTN priority: FF - the AFTN filing time and - the AFTN message text		
Test result:	**PASS**	**FAILED**	**INCONCLUSIVE**

IT302	**Convert an IPM to AFTN format (IUT-A)**		
Test-case id: **IT302/TC04**	Tested functionality: Conversion of messages with different ATS-message-priorities A DD priority message will be submitted from the UA of IUT-B, converted to AFTN in IUT-A and received at the AFTN terminal of IUT-A.		
Test description:	From the User Agent IUTBMHSA send the following message to the AFTN terminal IUTAFTNA of IUT-A: PRI: DD FT: <FT> OHI: TEST IT302/TC04 The message is converted from AMHS into AFTN format in the MTCU of IUT-A.		
Test control:	Check the correct reception of the message on the AFTN terminal IUTAFTNA of the IUT-A system. Check - the AFTN priority: DD - the AFTN filing time and - the AFTN message text		
Test result:	**PASS**	**FAILED**	**INCONCLUSIVE**

IT302	**Convert an IPM to AFTN format (IUT-A)**		
Test-case id: **IT302/TC05**	Tested functionality: Conversion of messages with different ATS-message-priorities An SS priority message will be submitted from the UA of IUT-B, converted to AFTN in IUT-A and received at the AFTN terminal of IUT-A.		
Test description:	From the User Agent IUTBMHSA send the following message to the AFTN terminal IUTAFTNA of IUT-A: PRI: SS FT: <FT> OHI: TEST IT302/TC05 The message is converted from AMHS into AFTN format in the MTCU of IUT-A. *Optional:* *Send an SS Acknowledgement message from the receiving AFTN terminal.*		
Test control:	Check the correct reception of the message on the AFTN terminal IUTAFTNA of the IUT-A system. Check - the AFTN priority: SS - the AFTN filing time and - the AFTN message text *Optional:* *When the SS Ack message is replied, the MTCU of IUT-A converts it into a RN.* *Check the reception of the RN at the UA IUTBMHSA of ITU-B.*		
Test result:	**PASS**	**FAILED**	**INCONCLUSIVE**

6.5 Gateway Operations (AFTN to AMHS to AFTN)

IT401	**Convert an AFTN message to an IPM and back to AFTN format (IUT-A to IUT-B)**		
Test-case id: **IT401/TC01**	Tested functionality: Conversion of messages with different AFTN priorities An AFTN message with KK priority will be sent from the AFTN terminal of IUT-A to the AFTN terminal of IUT-B.		
Test description:	From the AFTN terminal IUTAFTNA send the following message to the AFTN terminal IUTBFTNA of IUT-B: KK IUTBFTNA <FT> IUTAFTNA TEST IT401/TC01 The message is - converted from AFTN into AMHS format in the MTCU of IUT-A, - transferred via the MTA of IUT A to the MTA of IUT-B, - routed to the MTCU of IUT-B and - converted from AMHS into AFTN format in the MTCU of IUT-B. .		
Test control:	Check the correct reception of the message on the AFTN terminal IUTBFTNA of the IUT-B system. Check - the AFTN priority: KK - the AFTN filing time and - the AFTN message text		
Test result:	**PASS**	**FAILED**	**INCONCLUSIVE**

IT401	**Convert an AFTN message to an IPM and back to AFTN format (IUT-A to IUT-B)**		
Test-case id: **IT401/TC02**	Tested functionality: Conversion of messages with different AFTN priorities An AFTN message with GG priority will be sent from the AFTN terminal of IUT-A to the AFTN terminal of IUT-B.		
Test description:	From the AFTN terminal IUTAFTNA send the following message to the AFTN terminal IUTBFTNA of IUT-B: GG IUTBFTNA <FT> IUTAFTNA TEST IT401/TC02 The message is - converted from AFTN into AMHS format in the MTCU of IUT-A, - transferred via the MTA of IUT A to the MTA of IUT-B, - routed to the MTCU of IUT-B and - converted from AMHS into AFTN format in the MTCU of IUT-B. .		
Test control:	Check the correct reception of the message on the AFTN terminal IUTBFTNA of the IUT-B system. Check - the AFTN priority: GG - the AFTN filing time and - the AFTN message text		
Test result:	**PASS**	**FAILED**	**INCONCLUSIVE**

IT401	**Convert an AFTN message to an IPM and back to AFTN format (IUT-A to IUT-B)**		
Test-case id: **IT401/TC03**	Tested functionality: Conversion of messages with different AFTN priorities An AFTN message with FF priority will be sent from the AFTN terminal of IUT-A to the AFTN terminal of IUT-B.		
Test description:	From the AFTN terminal IUTAFTNA send the following message to the AFTN terminal IUTBFTNA of IUT-B: FF IUTBFTNA <FT> IUTAFTNA TEST IT401/TC03 The message is - converted from AFTN into AMHS format in the MTCU of IUT-A, - transferred via the MTA of IUT A to the MTA of IUT-B, - routed to the MTCU of IUT-B and - converted from AMHS into AFTN format in the MTCU of IUT-B. .		
Test control:	Check the correct reception of the message on the AFTN terminal IUTBFTNA of the IUT-B system. Check - the AFTN priority: FF - the AFTN filing time and - the AFTN message text		
Test result:	**PASS**	**FAILED**	**INCONCLUSIVE**

IT401	**Convert an AFTN message to an IPM and back to AFTN format (IUT-A to IUT-B)**		
Test-case id: **IT401/TC04**	Tested functionality: Conversion of messages with different AFTN priorities An AFTN message with DD priority will be sent from the AFTN terminal of IUT-A to the AFTN terminal of IUT-B.		
Test description:	From the AFTN terminal IUTAFTNA send the following message to the AFTN terminal IUTBFTNA of IUT-B: DD IUTBFTNA <FT> IUTAFTNA TEST IT401/TC04 The message is - converted from AFTN into AMHS format in the MTCU of IUT-A, - transferred via the MTA of IUT A to the MTA of IUT-B, - routed to the MTCU of IUT-B and - converted from AMHS into AFTN format in the MTCU of IUT-B. .		
Test control:	Check the correct reception of the message on the AFTN terminal IUTBFTNA of the IUT-B system. Check - the AFTN priority: DD - the AFTN filing time and - the AFTN message text		
Test result:	**PASS**	**FAILED**	**INCONCLUSIVE**

IT401	**Convert an AFTN message to an IPM and back to AFTN format (IUT-A to IUT-B)**		
Test-case id: **IT401/TC05**	Tested functionality: Conversion of messages with different AFTN priorities An AFTN message with SS priority will be sent from the AFTN terminal of IUT-A to the AFTN terminal of IUT-B.		
Test description:	From the AFTN terminal IUTAFTNA send the following message to the AFTN terminal IUTBFTNA of IUT-B: SS IUTBFTNA <FT> IUTAFTNA TEST IT401/TC05 The message is - converted from AFTN into AMHS format in the MTCU of IUT-A, - transferred via the MTA of IUT A to the MTA of IUT-B, - routed to the MTCU of IUT-B and - converted from AMHS into AFTN format in the MTCU of IUT-B. *Optional:* *Send an SS Acknowledgement message from the receiving AFTN terminal.*		
Test control:	Check the correct reception of the message on the AFTN terminal IUTBFTNA of the IUT-B system. Check - the AFTN priority: SS - the AFTN filing time and - the AFTN message text *Optional:* *When the SS Ack message is replied, the MTCU of IUT-B converts it into a RN, the RN is re-converted to an SS Acknowledgement message in the MTCU of IUT-A.* *Check the reception of the SS Acknowledgement at the AFTN terminal IUTAFTNA of ITU-A.*		
Test result:	**PASS**	**FAILED**	**INCONCLUSIVE**

IT402	**Convert an AFTN message to an IPM and back to AFTN format (IUT-B to IUT-A)**		
Test-case id: **IT402/TC01**	Tested functionality: Conversion of messages with different AFTN priorities An AFTN message with KK priority will be sent from the AFTN terminal of IUT-B to the AFTN terminal of IUT-A.		
Test description:	From the AFTN terminal IUTBFTNA send the following message to the AFTN terminal IUTAFTNA of IUT-A: KK IUTAFTNA <FT> IUTBFTNA TEST IT402/TC01 The message is - converted from AFTN into AMHS format in the MTCU of IUT-B, - transferred via the MTA of IUT B to the MTA of IUT-A, - routed to the MTCU of IUT-A and - converted from AMHS into AFTN format in the MTCU of IUT-A.		
Test control:	Check the correct reception of the message on the AFTN terminal IUTAFTNA of the IUT-A system. Check - the AFTN priority: KK - the AFTN filing time and - the AFTN message text		
Test result:	**PASS**	**FAILED**	**INCONCLUSIVE**

IT402	**Convert an AFTN message to an IPM and back to AFTN format (IUT-B to IUT-A)**		
Test-case id: **IT402/TC02**	Tested functionality: Conversion of messages with different AFTN priorities An AFTN message with GG priority will be sent from IUT-B to the AFTN terminal of IUT-A.		
Test description:	From the AFTN terminal IUTBFTNA send the following message to the AFTN terminal IUTAFTNA of IUT-A: GG IUTAFTNA <FT> IUTBFTNA TEST IT402/TC02 The message is - converted from AFTN into AMHS format in the MTCU of IUT-B, - transferred via the MTA of IUT B to the MTA of IUT-A, - routed to the MTCU of IUT-A and - converted from AMHS into AFTN format in the MTCU of IUT-A.		
Test control:	Check the correct reception of the message on the AFTN terminal IUTAFTNA of the IUT-A system. Check - the AFTN priority: GG - the AFTN filing time and - the AFTN message text		
Test result:	**PASS**	**FAILED**	**INCONCLUSIVE**

IT402	**Convert an AFTN message to an IPM and back to AFTN format (IUT-B to IUT-A)**		
Test-case id: **IT402/TC03**	Tested functionality: Conversion of messages with different AFTN priorities An AFTN message with FF priority will be sent from the AFTN terminal of IUT-B to the AFTN terminal of IUT-A.		
Test description:	From the AFTN terminal IUTBFTNA send the following message to the AFTN terminal IUTAFTNA of IUT-A: FF IUTAFTNA <FT> IUTBFTNA TEST IT402/TC03 The message is - converted from AFTN into AMHS format in the MTCU of IUT-B, - transferred via the MTA of IUT B to the MTA of IUT-A, - routed to the MTCU of IUT-A and - converted from AMHS into AFTN format in the MTCU of IUT-A.		
Test control:	Check the correct reception of the message on the AFTN terminal IUTAFTNA of the IUT-A system. Check - the AFTN priority: FF - the AFTN filing time and - the AFTN message text		
Test result:	**PASS**	**FAILED**	**INCONCLUSIVE**

IT402	**Convert an AFTN message to an IPM and back to AFTN format (IUT-B to IUT-A)**		
Test-case id: **IT402/TC04**	Tested functionality: Conversion of messages with different AFTN priorities An AFTN message with DD priority will be sent from the AFTN terminal of IUT-B to the AFTN terminal of IUT-A.		
Test description:	From the AFTN terminal IUTBFTNA send the following message to the AFTN terminal IUTAFTNA of IUT-A: DD IUTAFTNA <FT> IUTBFTNA TEST IT402/TC04 The message is - converted from AFTN into AMHS format in the MTCU of IUT-B, - transferred via the MTA of IUT B to the MTA of IUT-A, - routed to the MTCU of IUT-A and - converted from AMHS into AFTN format in the MTCU of IUT-A.		
Test control:	Check the correct reception of the message on the AFTN terminal IUTAFTNA of the IUT-A system. Check - the AFTN priority: DD - the AFTN filing time and - the AFTN message text		
Test result:	**PASS**	**FAILED**	**INCONCLUSIVE**

IT402	**Convert an AFTN message to an IPM and back to AFTN format (IUT-B to IUT-A)**		
Test-case id: **IT402/TC05**	Tested functionality: Conversion of messages with different AFTN priorities An AFTN message with SS priority will be sent from the AFTN terminal of IUT-B to the AFTN terminal of IUT-A.		
Test description:	From the AFTN terminal of IUTBFTNA send the following message to the AFTN terminal IUTAFTNA of IUT-A: SS IUTAFTNA <FT> IUTBFTNA TEST IT402/TC05 The message is - converted from AFTN into AMHS format in the MTCU of IUT-B, - transferred via the MTA of IUT B to the MTA of IUT-A, - routed to the MTCU of IUT-A and - converted from AMHS into AFTN format in the MTCU of IUT-A. *Optional:* *Send an SS Acknowledgement message from the receiving AFTN terminal.*		
Test control:	Check the correct reception of the message on the AFTN terminal IUTAFTNA of the IUT-A system. Check - the AFTN priority: SS - the AFTN filing time and - the AFTN message text *Optional:* *When the SS Ack message is replied, the MTCU of IUT-A converts it into a RN, the RN is re-converted to an SS Acknowledgement message in the MTCU of IUT-B.* *Check the reception of the SS Acknowledgement at the AFTN terminal IUTBFTNA of ITU-B.*		
Test result:	**PASS**	**FAILED**	**INCONCLUSIVE**

6.6 Gateway Operations – special cases

IT501	**Distribute an IPM to AMHS and AFTN users**		
Test-case id: **IT501/TC01**	Tested functionality: Distribution of IPM A message will be sent from a UA on IUT-A to IUT-B with Primary Recipients addressing an AFTN terminal and a UA in IUT-B.		
Test description:	From IUTAMHSA send the following message to: Primary Recipients: IUTBMHSA and IUTBFTNA PRI: FF FT: <FT> TEST IT501/TC01 Get the message at the UA- and AFTN terminals of IUT-B.		
Test control:	Check the correct reception of the message by IUTBFTNA and IUTBMHSA in the IUT-B configuration.		
Test result:	**PASS**	**FAILED**	**INCONCLUSIVE**

IT501	**Distribute an IPM to AMHS and AFTN users**		
Test-case id: **IT501/TC02**	Tested functionality: Distribution of IPM A message will be sent from a UA on IUT-B to IUT-A with Primary Recipients addressing an AFTN terminal and a UA in IUT-A.		
Test description:	From IUTBMHSA send the following message to: <u>Primary Recipients</u>: IUTAMHSA and IUTAFTNA PRI: FF FT: <FT> TEST IT501/TC02 Get the message at the UA- and AFTN terminals of IUT-A.		
Test control:	Check the correct reception of the message by IUTAFTNA and IUTAMHSA in the IUT-A configuration.		
Test result:	**PASS**	**FAILED**	**INCONCLUSIVE**

IT501	**Distribute an IPM to AMHS and AFTN users**		
Test-case id: **IT501/TC03**	Tested functionality: Distribution of IPM A message will be sent from a UA on IUT-A to IUT-B with Primary Recipients and Copy Recipients, addressing AFTN terminals and UAs in IUT-B.		
Test description:	From IUTAMHSA send the following message to: <u>Primary Recipients</u>: IUTBMHSA and IUTBFTNA <u>Copy Recipients</u>: IUTBMHSB and IUTBFTNB PRI: FF FT: <FT> TEST IT501/TC03 Get the message at the UA- and AFTN terminals of IUT-B.		
Test control:	Check the correct reception of the message by IUTBFTNA, IUTBFTNB and IUTBMHSA, IUTBMHSB in the IUT-B configuration.		
Test result:	**PASS**	**FAILED**	**INCONCLUSIVE**

IT501	**Distribute an IPM to AMHS and AFTN users**		
Test-case id: **IT501/TC04**	Tested functionality: Distribution of IPM A message will be sent from a UA on IUT-B to IUT-A with Primary Recipients and Copy Recipients, addressing AFTN terminals and UAs in IUT-A.		
Test description:	From IUTBMHSA send the following message to: Primary Recipients: IUTAMHSA and IUTAFTNA Copy Recipients: IUTAMHSB and IUTAFTNB PRI: FF FT: <FT> TEST IT501/TC04 Get the message at the UA- and AFTN terminals of IUT-A.		
Test control:	Check the correct reception of the message by IUTAFTNA, IUTAFTNB and IUTAMHSA, IUTAMHSB in the IUT-A configuration.		
Test result:	**PASS**	**FAILED**	**INCONCLUSIVE**

IT501	**Distribute an IPM to AMHS and AFTN users**		
Test-case id: **IT501/TC05**	Tested functionality: Distribution of IPM A message will be sent from a UA on IUT-A to IUT-B with Primary Recipients, Copy Recipients and Blind Copy Recipients, addressing AFTN terminals and UAs in IUT-B.		
Test description:	From IUTAMHSA send the following message to: Primary Recipients: IUTBMHSA and IUTBFTNA Copy Recipients: IUTBMHSB and IUTBFTNB Blind Copy Recipients: IUTBMHSC and IUTBFTNC PRI: FF FT: <FT> TEST IT501/TC05 Get the message at the UA- and AFTN terminals of IUT-B.		
Test control:	Check that at the AFTN Station of IUT-B one message with addresses IUTBFTNA, IUTBFTNB and another message with the address IUTBFTNC is received. Check that at the UA IUTBMHSA one IPM is received which contains the Primary Recipients IUTBMHSA, IUTBFTNA and the Copy Recipients IUTBMHSB, IUTBFTNB, but no Blind Copy Recipients. Check that at the UA IUTBMHSC one IPM is received which contains the Primary Recipients IUTBMHSA, IUTBFTNA, the Copy Recipients IUTBMHSB, IUTBFTNB and one Blind Copy Recipient IUTBMHSC.		
Test result:	**PASS**	**FAILED**	**INCONCLUSIVE**

IT501	**Distribute an IPM to AMHS and AFTN users**		
Test-case id: **IT501/TC06**	Tested functionality: Distribution of IPM A message will be sent from a UA on IUT-B to IUT-A with Primary Recipients, Copy Recipients and Blind Copy Recipients, addressing AFTN terminals and UAs in IUT-A.		
Test description:	From IUTBMHSA send the following message to: Primary Recipients: IUTAMHSA and IUTAFTNA Copy Recipients: IUTAMHSB and IUTAFTNB Blind Copy Recipients: IUTAMHSC and IUTAFTNC PRI: FF FT: <FT> TEST IT501/TC06 Get the message at the UA- and AFTN terminals of IUT-A.		
Test control:	Check that at the AFTN Station of IUT-A one message with addresses IUTAFTNA, IUTAFTNB and another message with the address IUTAFTNC is received. Check that at the UA IUTAMHSA one IPM is received which contains the Primary Recipients IUTAMHSA, IUTAFTNA and the Copy Recipients IUTAMHSB, IUTAFTNB, but no Blind Copy Recipients. Check that at the UA IUTAMHSC one IPM is received which contains the Primary Recipients IUTAMHSA, IUTAFTNA, the Copy Recipients IUTAMHSB, IUTAFTNB and one Blind Copy Recipient IUTAMHSC.		
Test result:	**PASS**	**FAILED**	**INCONCLUSIVE**

IT502	**Expand a DL addressing both AMHS and AFTN users**		
Test-case id: **IT502/TC01**	Tested functionality: Expanding of Distribution list The message will be sent from a UA on IUT-A addressing a local DL which contains addresses of AFTN terminals and the UA in IUT-B.		
Test description:	IUTADLLO must be configured as a local DL entry in IUT-A containing the addresses IUTBFTNA IUTBFTNB and IUTBMHSA. From IUTAMHSA send the following message to IUTADLLO: PRI: FF FT: <FT> TEST IT502/TC01 Get the message at the UA and AFTN terminals of IUT-B.		
Test control:	Check the correct reception of the message by AFTN terminals IUTBFTNA, IUTBFTNB and UA IUTBMHSA in the IUT-B configuration.		
Test result:	**PASS**	**FAILED**	**INCONCLUSIVE**

IT502	**Expand a DL addressing both AMHS and AFTN users**		
Test-case id: **IT502/TC02**	Tested functionality: Expanding of Distribution list The message will be sent from a UA on IUT-B addressing a local DL which contains addresses of AFTN terminals and the UA in IUT-A.		
Test description:	IUTBDLLO must be configured as a local DL entry in IUT-B containing the addresses IUTAFTNA, IUTAFTNB and IUTAMHSA. From IUTBMHSA send the following message to IUTBDLLO: PRI: FF FT: <FT> TEST IT502/TC02 Get the message at the UA and AFTN terminals of IUT-A.		
Test control:	Check the correct reception of the message by AFTN terminals IUTAFTNA, IUTAFTNB and UA IUTAMHSA in the IUT-A configuration.		
Test result:	**PASS**	**FAILED**	**INCONCLUSIVE**

IT502	**Expand a DL addressing both AMHS and AFTN users**		
Test-case id: **IT502/TC03**	Tested functionality: Expanding of Distribution list The message will be sent from a UA on IUT-A addressing a remote DL in IUT-B which contains addresses of AFTN terminals and the UA in IUT-B		
Test description:	IUTBDLRE must be configured as a local DL entry in IUT-B containing the addresses IUTBFTNA, IUTBFTNB and IUTBMHSA. From IUTAMHSA send the following message to IUTBDLRE: PRI: FF FT: <FT> TEST IT502/TC03 Get the message at the UA and AFTN terminals of IUT-B.		
Test control:	Check the correct reception of the message by AFTN terminals IUTBFTNA, IUTBFTNB and UA IUTBMHSA in the IUT-B configuration.		
Test result:	**PASS**	**FAILED**	**INCONCLUSIVE**

IT502	**Expand a DL addressing both AMHS and AFTN users**		
Test-case id: **IT502/TC04**	Tested functionality: Expanding of Distribution list The message will be sent from a UA on IUT-B addressing a remote DL in IUT-A which contains addresses of AFTN terminals and the UA in IUT-A		
Test description:	IUTADLRE must be configured as a local DL entry in IUT-A containing the addresses IUTAFTNA, IUTAFTNB and IUTAMHSA. From IUTBMHSA send the following message to IUTADLRE: PRI: FF FT: <FT> TEST IT502/TC04 Get the message at the UA- and AFTN terminals of IUT-B.		
Test control:	Check the correct reception of the message by AFTN terminals IUTAFTNA, IUTAFTNB and UA IUTAMHSA in the IUT-A configuration.		
Test result:	**PASS**	**FAILED**	**INCONCLUSIVE**

IT503	**Convert or reject an IPM, if the ATS-message-text contains more than 1800 characters**		
Test-case id: **IT503/TC01**	Tested functionality: Conversion of “long” messages A message with normal priority and length of about 4500 characters is sent from the IUT-A to the IUT-B		
Test description:	From UA IUTAMHSA of IUT-A send the following message to the AFTN terminal IUTBFTNA: PRI: FF FT: <FT> OHI: TEST IT503/TC01 TEXT 4500 CHARACTERS 1234567890123456789012345678901234567890123456789012345678901234567890123456789 1234567890123456789012345678901234567890123456789012345678901234567890123456789 1234567890123456789012345678901234567890123456789012345678901234567890123456789 … 1234567890123456789012345678901234567890123456789012345678901234567890123456789 END		
Test control:	The technical specifications (4.5.2.1.7) specify that the message can be rejected (case a) or split into several messages (case b). If the system provides “long AFTN message” capability the message will be converted (case c). <u>If case a is implemented:</u> The message is not conveyed to the AFTN component. Check the Report received at the User Agent position IUTAMHSA Verify the following Per-Recipient-Report Non-Delivery information: - Actual-recipient-name: MF-form address of IUTBFTNA - reason code 1 signifies "unable-to-transfer" - diagnostic code 7 signifies "content-too-long". - supplementary information: "unable to convert to AFTN due to message text length". <u>If case b is implemented:</u> Check that IUTBFTNA receives several messages. <u>If case c is implemented:</u> Check that IUTBFTNA receives one message.		
Test result:	**PASS**	**FAILED**	**INCONCLUSIVE**
	a / b / c		

IT503	**Convert or reject an IPM, if the ATS-message-text contains more than 1800 characters**		
Test-case id: **IT503/TC02**	Tested functionality: Conversion of “long” messages A message with normal priority and length of about 4500 characters is sent from the IUT-B to the IUT-A		
Test description:	From UA IUTBMHSA of IUT-B send the following message to the AFTN terminal IUTAFTNA: PRI: FF FT: <FT> OHI: TEST IT503/TC02 TEXT 4500 CHARACTERS 1234567890123456789012345678901234567890123456789012345678901234567890123456789 1234567890123456789012345678901234567890123456789012345678901234567890123456789 1234567890123456789012345678901234567890123456789012345678901234567890123456789 … 1234567890123456789012345678901234567890123456789012345678901234567890123456789 END		
Test control:	The technical specifications (4.5.2.1.7) specify that the message can be rejected (case a) or split into several messages (case b). If the system provides “long AFTN message” capability the message will be converted (case c). <u>If case a is implemented:</u> The message is not conveyed to the AFTN component. Check the Report received at the User Agent position IUTBMHSA Verify the following Per-Recipient-Report Non-Delivery information: - Actual-recipient-name: MF-form address of IUTAFTNA - reason code 1 signifies "unable-to-transfer" - diagnostic code 7 signifies "content-too-long". - supplementary information: "unable to convert to AFTN due to message text length". <u>If case b is implemented:</u> Check that IUTAFTNA receives several messages. <u>If case c is implemented:</u> Check that IUTAFTNA receives one message.		
Test result:	**PASS**	**FAILED**	**INCONCLUSIVE**
	a / b / c		

IT504	**Split an incoming IPM addressing more than 21 AFTN users**		
Test-case id: **IT504/TC01**	Tested functionality: Conversion of messages with more than 21 addresses A message with normal priority containing 50 recipients is sent from the IUT-A to the IUT-B.		
Test description:	From IUTAMHSA send the following message to the following addressees (all recipients in the corresponding MF-Form): IUTBFTNA, IUTBFTNB, IUTBFTNC, IUTBFTND, IUTBFTNE, IUTBFTNF, IUTBFTNG, IUTBFTNH, IUTBFTNI, IUTBFTNJ, IUTBFTNK, IUTBFTNL, IUTBFTNM, IUTBFTNN, IUTBFTNO, IUTBFTNP, IUTBFTNQ, IUTBFTNR, IUTBFTNS, IUTBFTNT, IUTBFTNU, IUTBFTNV, IUTBFTNW, IUTBFTNX, IUTBFTNY, IUTBFTAA, IUTBFTAB, IUTBFTAC, IUTBFTAD, IUTBFTAE, IUTBFTAF, IUTBFTAG, IUTBFTAH, IUTBFTAI, IUTBFTAJ, IUTBFTAK, IUTBFTAL, IUTBFTAM, IUTBFTAN, IUTBFTAO, IUTBFTAP, IUTBFTAQ, IUTBFTAR, IUTBFTAS, IUTBFTAT, IUTBFTAU, IUTBFTAV, IUTBFTAW, IUTBFTAX, IUTBFTAY PRI: FF FT: <FT> OHI: TEST IT504/TC01		
Test control:	PDR M4050004 (Title: AMHS - Too Many Recipients) is resolved. Therefore the message shall be split into several messages. The message is split into 3 copies, each conveyed to the AFTN component. The first copy is addressed to 21 of the 50 addressee indicators. The second copy is addressed to further 21 addressee indicators. The third copy is addressed to the remaining 8 of the 50 addressee indicators. Check the correct reception of the messages on the AFTN terminal of IUT-B.		
Test result:	**PASS**	**FAILED**	**INCONCLUSIVE**

IT504	**Split an incoming IPM addressing more than 21 AFTN users**		
Test-case id: **IT504/TC02**	Tested functionality: Conversion of messages with more than 21 addresses A message with normal priority containing 50 recipients is sent from the IUT-B to the IUT-A.		
Test description:	From IUTBMHSA send the following message to the following addressees (all recipients in the corresponding MF-Form): IUTAFTNA, IUTAFTNB, IUTAFTNC, IUTAFTND, IUTAFTNE, IUTAFTNF, IUTAFTNG, IUTAFTNH, IUTAFTNI, IUTAFTNJ, IUTAFTNK, IUTAFTNL, IUTAFTNM, IUTAFTNN, IUTAFTNO, IUTAFTNP, IUTAFTNQ, IUTAFTNR, IUTAFTNS, IUTAFTNT, IUTAFTNU, IUTAFTNV, IUTAFTNW, IUTAFTNX, IUTAFTNY, IUTAFTAA, IUTAFTAB, IUTAFTAC, IUTAFTAD, IUTAFTAE, IUTAFTAF, IUTAFTAG, IUTAFTAH, IUTAFTAI, IUTAFTAJ, IUTAFTAK, IUTAFTAL, IUTAFTAM, IUTAFTAN, IUTAFTAO, IUTAFTAP, IUTAFTAQ, IUTAFTAR, IUTAFTAS, IUTAFTAT, IUTAFTAU, IUTAFTAV, IUTAFTAW, IUTAFTAX, IUTAFTAY PRI: FF FT: <FT> OHI: TEST IT504/TC02		
Test control:	PDR M4050004 (Title: AMHS - Too Many Recipients) is resolved. Therefore the message shall be split into several messages. The message is split into 3 copies, each conveyed to the AFTN component. The first copy is addressed to 21 of the 50 addressee indicators. The second copy is addressed to further 21 addressee indicators. The third copy is addressed to the remaining 8 of the 50 addressee indicators. Check the correct reception of the messages on the AFTN terminal of IUT-A.		
Test result:	**PASS**	**FAILED**	**INCONCLUSIVE**

IT505	**Probe Conveyance Test**		
Test-case id: **IT505/TC01**	Tested functionality: Processing of Probe Messages by UA and MTCU. The probe will be sent from a UA on IUT-A to IUT-B, addressing AFTN terminals and UAs in IUT-B.		
Test description:	From IUTAMHSA send a probe to IUTBFTNA, IUTBFTNB, IUTBMHSA.		
Test control:	On IUT-A UA IUTAMHSA: One Delivery Report (DR) with 2 AFTN recipients from the MTCU and one DR with one recipient from the MTA Verify that the DR reporting about the AFTN addresses contains the supplementary information “This report only indicates successful (potential) conversion to AFTN, not delivery to a recipient”.		
Test result:	**PASS**	**FAILED**	**INCONCLUSIVE**

IT505	**Probe Conveyance Test**		
Test-case id: **IT505/TC02**	Tested functionality: Processing of Probe Messages by UA and MTCU. The probe will be sent from a UA on IUT-B to IUT-A, addressing AFTN terminals and UAs in IUT-A.		
Test description:	From IUTBMHSA send a probe to IUTAFTNA, IUTAFTNB, IUTAMHSA.		
Test control:	On IUT-B UA IUTBMHSA: One Delivery Report (DR) with 2 AFTN recipients from the MTCU and one DR with one recipient from the MTA Verify that the DR reporting about the AFTN addresses contains the supplementary information “This report only indicates successful (potential) conversion to AFTN, not delivery to a recipient”.		
Test result:	**PASS**	**FAILED**	**INCONCLUSIVE**

IT505	**Probe Conveyance Test**		
Test-case id: **IT505/TC03**	Tested functionality: Processing of Probe Messages by UA and MTCU. The probe will be sent from a UA on IUT-A to IUT-B, containing the address of an AFTN terminal of IUT-B and two MF addresses which cannot be translated by the MTCU of IUT-B.		
Test description:	From IUTAMHSA send a probe to IUTBFTNA, IUTBFTUU and IUTBFTUV (the latter 2 being the nicknames of the addresses as in 3.5, Table 24).		
Test control:	Verify that at UA IUTAMHSA: A Delivery Report (DR), containing the reported recipient IUTBFTNA and a Non-Delivery Report (NDR), containing the reported recipient IUTBFTUU and IUTBFTUV, with: - non-delivery-reason-code set to “unable-to-transfer”, - non-delivery-diagnostic-code set to “unrecognized-OR-name” are received. Verify that the DR reporting about the address which could be translated contains the supplementary information “This report only indicates successful (potential) conversion to AFTN, not delivery to a recipient”.		
Test result:	**PASS**	**FAILED**	**INCONCLUSIVE**

IT505	**Probe Conveyance Test**		
Test-case id: **IT505/TC04**	Tested functionality: Processing of Probe Messages by UA and MTCU. The probe will be sent from a UA on IUT-B to IUT-A, containing the address of an AFTN terminal of IUT-A and two MF addresses which cannot be translated by the MTCU of IUT-A.		
Test description:	From IUTBMHSA send a probe to IUTAFTNA, IUTAFTUU and IUTAFTUV (the latter 2 being the nicknames of the addresses as in 3.5, Table 21		
Test control:	Verify that at UA IUTBMHSA: A Delivery Report (DR), containing the reported recipient IUTAFTNA and a Non-Delivery Report (NDR), containing the reported recipient IUTAFTUU and IUTAFTUV, with: - non-delivery-reason-code set to “unable-to-transfer”, - non-delivery-diagnostic-code set to “unrecognized-OR-name” are received. Verify that the DR reporting about the address which could be translated contains the supplementary information “This report only indicates successful (potential) conversion to AFTN, not delivery to a recipient”.		
Test result:	**PASS**	**FAILED**	**INCONCLUSIVE**

6.7 Stress traffic situations

IT601	**Stress load**		
Test-case id: **IT601/TC01**	Tested functionality: AMHS traffic interchange after queuing of an amount of messages After queuing of an amount of messages both IUTs start sending a burst of messages		
Test description:	Interrupt the connection between IUT-A and IUT-B by disabling the physical connector used to send information to the underlying network in one of the IUTs. Select from the data base or generated by the UA and/or the AFTN terminal 100 messages in both IUTs. For example, from IUTAFTNA send 100 messages to IUTBFTNA, IUTBMHSA. and from IUTBFTNA send 100 messages to IUTAFTNA, IUTAMHSA, In the result on IUT-A and IUT-B there are 100 messages queued in direction to the peer IUT. Re-establish the connection between IUT-A and IUT-B. The queued messages will be sent simultaneously from both IUTs. Measure the time: from re-establishing the connection till sending the first message and from sending the first till sending the last message. Measure the time: from re-establishing the connection till receiving the first message and from receiving the first message till receiving the last message.		
Test control:	Check that all 100 messages are received at the addressed terminals. Check that no errors or malfunction are reported or observed at the IUTs during the interchange period. Analyse the measured time. Calculate at both sides the amount of time needed to flush the queues. Unacceptable delays shall be treated as “FAILED”.		
Test result:	**PASS**	**FAILED**	**INCONCLUSIVE**

The following table can be used to make notes of the Test Control Result.

Test Control	**Result IT601/TC01**	**Result IT601/TC02**	**Result IT601/TC03**
1. Notice the time of re-establishing the connection sending direction.			
2. Notice the time of sending the first message.			
3. Notice the time of sending the last message.			
4. Notice the time of re-establishing the connection receiving direction.			
5. Notice the time of receiving the first message.			
6. Notice the time of receiving the last message.			
7. Notice the number of messages received (shall be equal to the number of messages expected.)			
8. Check the event logging of the system for abnormalities in the area of AMHS / X.400 / AFTN/AMHS Gateway.			
9. Check the event logging / traffic traces for NDRs. (No NDRs are awaited.)			
10. Check for Control Position events. (No related events are awaited.)			
11. Check the X.400 / AMHS diagnostics, check the number of associations used (in particular possible hanging/unused associations).			
12. Monitor the underlying network infrastructure (network specialist).			
13. At both sides note the amount of time needed to flush the queues. (Unacceptable delays shall be treated as “FAILED”)			

IT601	**Stress load**		
Test-case id: **IT601/TC02**	Tested functionality: AMHS traffic interchange after queuing of an amount of messages After queuing of an amount of messages both IUTs start sending a burst of messages		
Test description:	Interrupt the connection between IUT-A and IUT-B by disabling the physical connector used to send information to the underlying network in one of the IUTs. Select from the data base or generated by the UA and/or the AFTN terminal 200 messages in both IUTs. For example, from IUTAFTNA send 200 messages to IUTBFTNA, IUTBMHSA. and from IUTBFTNA send 200 messages to IUTAFTNA, IUTAMHSA, In the result on IUT-A and IUT-B there are 200 messages queued in direction to the peer IUT. Re-establish the connection between IUT-A and IUT-B. The queued messages will be sent simultaneously from both IUTs. Measure the time: • from re-establishing the connection till sending the first message and • from sending the first till sending the last message. Measure the time: • from re-establishing the connection till receiving the first message and • from receiving the first message till receiving the last message.		
Test control:	Check that all 200 messages are received at the addressed terminals. Check that no errors or malfunction are reported or observed at the IUTs during the interchange period. Analyse the measured time. Calculate at both sides the amount of time needed to flush the queues. Unacceptable delays shall be treated as “FAILED”.		
Test result:	**PASS**	**FAILED**	**INCONCLUSIVE**

IT601	**Stress load**		
Test-case id: **IT601/TC03**	Tested functionality: AMHS traffic interchange after queuing of an amount of messages After queuing of an amount of messages both IUTs start sending a burst of messages		
Test description:	Interrupt the connection between IUT-A and IUT-B by disabling the physical connector used to send information to the underlying network in one of the IUTs. Select from the data base or generated by the UA and/or the AFTN terminal 400 messages in both IUTs. For example, from IUTAFTNA send 400 messages to IUTBFTNA, IUTBMHSA. and from IUTBFTNA send 400 messages to IUTAFTNA, IUTAMHSA, In the result on IUT-A and IUT-B there are 400 messages queued in direction to the peer IUT. Re-establish the connection between IUT-A and IUT-B. The queued messages will be sent simultaneously from both IUTs. Measure the time: • from re-establishing the connection till sending the first message and • from sending the first till sending the last message. Measure the time: • from re-establishing the connection till receiving the first message and • from receiving the first message till receiving the last message.		
Test control:	Check that all 400 messages are received at the addressed terminals. Check that no errors or malfunction are reported or observed at the IUTs during the interchange period. Analyse the measured time. Calculate at both sides the amount of time needed to flush the queues. Unacceptable delays shall be treated as “FAILED”.		
Test result:	**PASS**	**FAILED**	**INCONCLUSIVE**

7. Trilateral Test procedures - optional

7.1 Submission/Transfer/Delivery and Relay operations

IT701	**Submission / Transfer / Delivery**		
Test-case id: **IT701/TC01**	Tested functionality: Submission, transfer and delivery of messages to different IUTs An IPM submitted in IUT-A is transferred to IUT-B, IUT-C and delivered to the UAs of IUT-B, IUT-C.		
Test description:	Verify that the X.400 routing tables are configured according section 3.3, thus: The X.400 routing table of IUT-A routes PRMD=IUTLAND-B to IUT-B and PRMD=IUTLAND-C to IUT-C. From UA IUTAMHSA send an ATS message (IPM) to UA IUTBMHSA and IUTCMHSA: PRI: FF FT: <FT> OHI: TEST IT701/TC01		
Test control:	Verify that the message is received by both remote UAs in IUT-B and IUT-C. In particular, verify: • ATS-message-priority FF, • ATS-message-filing-time, • ATS-message-text.		
Test result:	**PASS**	**FAILED**	**INCONCLUSIVE**

IT701	**Submission / Transfer / Delivery**		
Test-case id: **IT701/TC02**	Tested functionality: Submission, transfer and delivery of messages to different IUTs An IPM submitted in IUT-B is transferred to IUT-C, IUT-A and delivered to the UAs of IUT-C, IUT-A.		
Test description:	Verify that the X.400 routing tables are configured according section 3.3, thus: The X.400 routing table of IUT-B routes PRMD=IUTLAND-C to IUT-C and PRMD=IUTLAND-A to IUT-A. From the UA IUTBMHSA send an ATS message (IPM) to UA IUTAMHSA and IUTCMHSA. PRI: FF FT: <FT> OHI: TEST IT701/TC02		
Test control:	Verify that the message is received by both remote UAs in IUT-A and IUT-C. In particular, verify: • ATS-message-priority, • ATS-message-filing-time, • ATS-message-text.		
Test result:	**PASS**	**FAILED**	**INCONCLUSIVE**

IT701	**Submission / Transfer / Delivery between the partner MTAs**		
Test-case id: **IT701/TC03**	Tested functionality: Submission, transfer and delivery of messages to different IUTs An IPM submitted in IUT-C is transferred to IUT-A, IUT-B and delivered to the UA of IUT-A, IUT-B.		
Test description:	Verify that the X.400 routing tables are configured according section 3.3, thus: The X.400 routing table of IUT-C routes PRMD=IUTLAND-A to IUT-A and PRMD=IUTLAND-B to IUT-B. From the UA IUTCMHSA send an ATS message (IPM) to UA IUTAMHSA and IUTBMHSA. PRI: FF FT: <FT> OHI: TEST IT701/TC03		
Test control:	Verify that the messages is received by both remote UAs in IUT-A and IUT-B. In particular, verify: • ATS-message-priority, • ATS-message-filing-time, • ATS-message-text.		
Test result:	**PASS**	**FAILED**	**INCONCLUSIVE**

IT702	**Relay operations**		
Test-case id: **IT702/TC01**	Tested functionality: Transfer of messages by an IUT in between An IPM is routed via an intermediate MTA and transferred from one IUT to another IUT via a “relay” IUT.		
Test description:	Modify the X.400 routing as follows: The X.400 routing table of IUT-A routes PRMD=IUTLAND-B and PRMD=IUTLAND-C to IUT-B. The X.400 routing table of IUT-B routes PRMD=IUTLAND-C to IUT-C. Hence, IUT-B is the “relay” IUT. From the UA IUTAMHSA send an ATS message (IPM) to the UA IUTCMHSA. PRI: FF FT: <FT> OHI: TEST IT702/TC01		
Test control:	Verify that the message has passed the IUT-B in between (if possible). Verify that the message is received by the UA IUTCMHSA. In particular, verify: • ATS-message-priority, • ATS-message-filing-time, • ATS-message-text.		
Test result:	**PASS**	**FAILED**	**INCONCLUSIVE**

IT702	**Relay operations**		
Test-case id: **IT702/TC02**	Tested functionality: Transfer of messages by an IUT in between An IPM is routed via an intermediate MTA and transferred from one IUT to another IUT via a “relay” IUT.		
Test description:	Modify the X.400 routing as follows: The X.400 routing table of IUT-B routes PRMD=IUTLAND-A and PRMD=IUTLAND-C to IUT-C. The X.400 routing table of IUT-C routes PRMD=IUTLAND-A to IUT-A. Hence, IUT-C is the “relay” IUT. From the UA IUTBMHSA send an ATS message (IPM) to the UA IUTAMHSA. PRI: FF FT: <FT> OHI: TEST IT702/TC02		
Test control:	Verify that the message has passed the IUT-C in between (if possible). Verify that the message is received by the UA IUTAMHSA. In particular, verify: • ATS-message-priority, • ATS-message-filing-time, • ATS-message-text.		
Test result:	**PASS**	**FAILED**	**INCONCLUSIVE**

IT702	**Relay operations**		
Test-case id: **IT702/TC03**	Tested functionality: Transfer of messages by an IUT in between An IPM is routed via an intermediate MTA and transferred from one IUT to another IUT via a “relay” IUT.		
Test description:	Modify the X.400 routing as follows: The X.400 routing table of IUT-C routes PRMD=IUTLAND-A and PRMD=IUTLAND-B to IUT-A. The X.400 routing table of IUT-A routes PRMD=IUTLAND-B to IUT-B. Hence, IUT-A is the “relay” IUT. From the UA IUTCMHSA send an ATS message (IPM) to the UA IUTBMHSA. PRI: FF FT: <FT> OHI: TEST IT702/TC03		
Test control:	Verify that the message has passed the IUT-A in between (if possible). Verify that the message is received by the UA IUTBMHSA. In particular, verify: • ATS-message-priority, • ATS-message-filing-time, • ATS-message-text.		
Test result:	**PASS**	**FAILED**	**INCONCLUSIVE**

7.2 Test of special situations

IT801	**Alternate MTA routing**		
Test-case id: **IT801/TC01**	Tested functionality: Alternate routing capability An ATS message (IPM) queued due to outage of the primary X.400 routing path is routed via an alternate MTA (IUT).		
Test description:	Verify that the X.400 routing tables are configured according section 3.3, thus: The X.400 routing table of IUT-A routes PRMD=IUTLAND-B to IUT-B and PRMD=IUTLAND-C to IUT-C. The X.400 routing table of IUT-C routes PRMD=IUTLAND-A to IUT-A and PRMD=IUTLAND-B to IUT-B. Cut the direct connection from IUT-A to IUT-B. From the UA IUTAMHSA send an ATS message (IPM) to the UA IUTBMHSA. If alternate MTA routing functionality is implemented and configured in IUT-A, the message will be transferred automatically via the “alternate” connection. Otherwise: Reroute the queued message manually (an operational procedure for should exist).		
Test control:	Verify that the messages had passed the IUT-C in between (if possible). Verify the message received by the UA IUTBMHSA. In particular, verify: • ATS-message-priority, • ATS-message-filing-time, • ATS-message-text.		
Test result:	**PASS**	**FAILED**	**INCONCLUSIVE**

IT801	**Alternate MTA routing**		
Test-case id: **IT801/TC02**	Tested functionality: Alternate routing capability An ATS message (IPM) queued due to outage of the primary X.400 routing path is routed via an alternate MTA (IUT).		
Test description:	Verify that the X.400 routing tables are configured according section 3.3, thus: The X.400 routing table of IUT-A routes PRMD=IUTLAND-B to IUT-B and PRMD=IUTLAND-C to IUT-C. The X.400 routing table of IUT-B routes PRMD=IUTLAND-A to IUT-A and PRMD=IUTLAND-C to IUT-C. Cut the direct connection from IUT-B to IUT-C. From the UA IUTBMHSA send an ATS message (IPM) to the UA IUTCMHSA. If alternate MTA routing functionality is implemented and configured in IUT-B, the message will be transferred automatically via the “alternate” connection. Otherwise: Reroute the queued message manually (an operational procedure for should exist).		
Test control:	Verify that the message had passed the IUT-A in between (if possible). Verify the message received by the UA of IUTCMHSA. In particular, verify: • ATS-message-priority, • ATS-message-filing-time, • ATS-message-text.		
Test result:	**PASS**	**FAILED**	**INCONCLUSIVE**

IT801	**Alternate MTA routing**		
Test-case id: **IT801/TC03**	Tested functionality: Alternate routing capability An ATS message (IPM) queued due to outage of the primary X.400 routing path is routed via an alternate MTA (IUT).		
Test description:	Verify that the X.400 routing tables are configured according section 3.3, thus: The X.400 routing table of IUT-B routes PRMD=IUTLAND-A to IUT-A and PRMD=IUTLAND-C to IUT-C. The X.400 routing table of IUT-C routes PRMD=IUTLAND-A to IUT-A and PRMD=IUTLAND-B to IUT-B. Cut the direct connection from IUT-C to IUT-A. From the UA IUTCMHSA send an ATS message (IPM) to the UA IUTAMHSA. If alternate MTA routing functionality is implemented and configured in IUT-C, the message will be transferred automatically via the “alternate” connection. Otherwise: Reroute the queued message manually (an operational procedure for should exist).		
Test control:	Verify that the message had passed the IUT-B in between (if possible). Verify the message received by the UA of IUTAMHSA. In particular, verify: • ATS-message-priority, • ATS-message-filing-time, • ATS-message-text.		
Test result:	**PASS**	**FAILED**	**INCONCLUSIVE**

IT802	**Loop detection**		
Test-case id: **IT802/TC01**	Tested functionality: IUT-A detects that a message submitted in IUT-A is traversing a loop.		
Test description:	Create a temporary routing loop. The X.400 routing table of IUT-A routes PRMD=IUTLAND-X to IUT-B. The X.400 routing table of IUT-B routes PRMD=IUTLAND-X to IUT-C. The X.400 routing table of IUT-C routes PRMD=IUTLAND-X to IUT-A. Set the loop detection parameters of the IUTs in that way that IUT-A will detect the loop first! From UA IUTAMHSA send a message (IT802/M01) addressed to IUTXLOOP. This message will be routed cyclically so that it is finally performing a loop. IUT-A detects that the message is looping, stops the further transfer and non-delivers the message. *Note: The addressing scheme of the MD /C=XX/ADMD=ICAO/PRMD=IUTLAND-X is irrelevant for the loop detection tests IT802. Therefore it does not matter whether the recipient address IUTXLOOP in tests IT802 has CAAS or XF form.*		
Test control:	Verify that: • IUT-A detects that the message is looping, • the message is discarded in IUT-A, • at UA IUTAMHSA a Non-Delivery-Report is received with non-delivery-reason “transfer-failure” and non-delivery-diagnostic-code “loop detected”.		
Test result:	**PASS**	**FAILED**	**INCONCLUSIVE**

IT802	**Loop detection**		
Test-case id: **IT802/TC02**	Tested functionality: IUT-A detects that a message submitted in IUT-B is traversing a loop.		
Test description:	Create a temporary routing loop. The X.400 routing table of IUT-A routes PRMD=IUTLAND-X to IUT-B. The X.400 routing table of IUT-B routes PRMD=IUTLAND-X to IUT-C. The X.400 routing table of IUT-C routes PRMD=IUTLAND-X to IUT-A. Set the loop detection parameters of the IUTs in that way that IUT-A will detect the loop first! From UA IUTBMHSA send a message (IT802/M02) addressed to IUTXLOOP. This message will be routed cyclically so that it is finally performing a loop. IUT-A detects that the message is looping, stops the further transfer and non-delivers the message. *Note: The addressing scheme of the MD /C=XX/ADMD=ICAO/PRMD=IUTLAND-X is irrelevant for the loop detection tests IT802. Therefore it does not matter whether the recipient address IUTXLOOP in tests IT802 has CAAS or XF form.*		
Test control:	Verify that: • IUT-A detects that the message is looping, • the message is discarded in IUT-A, • at UA IUTBMHSA a Non-Delivery-Report is received with non-delivery-reason “transfer-failure” and non-delivery-diagnostic-code “loop detected”.		
Test result:	**PASS**	**FAILED**	**INCONCLUSIVE**

IT802	**Loop detection**		
Test-case id: **IT802/TC03**	Tested functionality: IUT-A detects that a message submitted in IUT-C is traversing a loop.		
Test description:	Create a temporary routing loop. The X.400 routing table of IUT-A routes PRMD=IUTLAND-X to IUT-B. The X.400 routing table of IUT-B routes PRMD=IUTLAND-X to IUT-C. The X.400 routing table of IUT-C routes PRMD=IUTLAND-X to IUT-A. Set the loop detection parameters of the IUTs in that way that IUT-A will detect the loop first! From UA IUTCMHSA send a message (IT802/M03) addressed to IUTXLOOP. This message will be routed cyclically so that it is finally performing a loop. IUT-A detects that the message is looping, stops the further transfer and non-delivers the message. *Note: The addressing scheme of the MD /C=XX/ADMD=ICAO/PRMD=IUTLAND-X is irrelevant for the loop detection tests IT802. Therefore it does not matter whether the recipient address IUTXLOOP in tests IT802 has CAAS or XF form.*		
Test control:	Verify that: • IUT-A detects that the message is looping. • the message is discarded in IUT-A, • at UA IUTCMHSA a Non-Delivery-Report is received with non-delivery-reason “transfer-failure” and non-delivery-diagnostic-code “loop detected”.		
Test result:	**PASS**	**FAILED**	**INCONCLUSIVE**

IT802	**Loop detection**		
Test-case id: **IT802/TC04**	Tested functionality: IUT-B detects that a message submitted in IUT-A is traversing a loop.		
Test description:	Create a temporary routing loop. The X.400 routing table of IUT-A routes PRMD=IUTLAND-X to IUT-B. The X.400 routing table of IUT-B routes PRMD=IUTLAND-X to IUT-C. The X.400 routing table of IUT-C routes PRMD=IUTLAND-X to IUT-A. Set the loop detection parameters of the IUTs in that way that IUT-B will detect the loop first! From UA IUTAMHSA send a message (IT802/M01) addressed to IUTXLOOP. This message will be routed cyclically so that it is finally performing a loop. IUT-B detects that the message is looping, stops the further transfer and non-delivers the message. *Note: The addressing scheme of the MD /C=XX/ADMD=ICAO/PRMD=IUTLAND-X is irrelevant for the loop detection tests IT802. Therefore it does not matter whether the recipient address IUTXLOOP in tests IT802 has CAAS or XF form.*		
Test control:	Verify that: • IUT-B detects that the message is looping, • the message is discarded in IUT-B, • at UA IUTAMHSA a Non-Delivery-Report is received with non-delivery-reason “transfer-failure” and non-delivery-diagnostic-code “loop detected”.		
Test result:	**PASS**	**FAILED**	**INCONCLUSIVE**

IT802	**Loop detection**		
Test-case id: **IT802/TC05**	Tested functionality: IUT-B detects that a message submitted in IUT-B is traversing a loop.		
Test description:	Create a temporary routing loop. The X.400 routing table of IUT-A routes PRMD=IUTLAND-X to IUT-B. The X.400 routing table of IUT-B routes PRMD=IUTLAND-X to IUT-C. The X.400 routing table of IUT-C routes PRMD=IUTLAND-X to IUT-A. Set the loop detection parameters of the IUTs in that way that IUT-B will detect the loop first! From UA IUTBMHSA send a message (IT802/M02) addressed to IUTXLOOP. This message will be routed cyclically so that it is finally performing a loop. IUT-B detects that the message is looping, stops the further transfer and non-delivers the message. *Note: The addressing scheme of the MD /C=XX/ADMD=ICAO/PRMD=IUTLAND-X is irrelevant for the loop detection tests IT802. Therefore it does not matter whether the recipient address IUTXLOOP in tests IT802 has CAAS or XF form.*		
Test control:	Verify that: • IUT-B detects that the message is looping, • the message is discarded in IUT-B, • at UA IUTBMHSA a Non-Delivery-Report is received with non-delivery-reason “transfer-failure” and non-delivery-diagnostic-code “loop detected”.		
Test result:	**PASS**	**FAILED**	**INCONCLUSIVE**

IT802	**Loop detection**		
Test-case id: **IT802/TC06**	Tested functionality: IUT-B detects that a message submitted in IUT-C is traversing a loop.		
Test description:	Create a temporary routing loop. The X.400 routing table of IUT-A routes PRMD=IUTLAND-X to IUT-B. The X.400 routing table of IUT-B routes PRMD=IUTLAND-X to IUT-C. The X.400 routing table of IUT-C routes PRMD=IUTLAND-X to IUT-A. Set the loop detection parameters of the IUTs in that way that IUT-B will detect the loop first! From UA IUTCMHSA send a message (IT802/M03) addressed to IUTXLOOP. The message will be routed cyclically so that it is finally performing a loop. IUT-B detects that the message is looping, stops the further transfer and non-delivers the message. *Note: The addressing scheme of the MD /C=XX/ADMD=ICAO/PRMD=IUTLAND-X is irrelevant for the loop detection tests IT802. Therefore it does not matter whether the recipient address IUTXLOOP in tests IT802 has CAAS or XF form.*		
Test control:	Verify that: • IUT-B detects that the message is looping, • the message is discarded in IUT-B • at UA IUTCMHSA a Non-Delivery-Report is received with non-delivery-reason “transfer-failure” and non-delivery-diagnostic-code “loop detected”.		
Test result:	**PASS**	**FAILED**	**INCONCLUSIVE**

IT802	**Loop detection**		
Test-case id: **IT802/TC07**	Tested functionality: IUT-C detects that a message submitted in IUT-A is traversing a loop.		
Test description:	Create a temporary routing loop. The X.400 routing table of IUT-A routes PRMD=IUTLAND-X to IUT-B. The X.400 routing table of IUT-B routes PRMD=IUTLAND-X to IUT-C. The X.400 routing table of IUT-C routes PRMD=IUTLAND-X to IUT-A. Set the loop detection parameters of the IUTs in that way that IUT-C will detect the loop first! From UA IUTAMHSA send a message (IT802/M01) addressed to IUTXLOOP. This message will be routed cyclically so that it is finally performing a loop. IUT-C detects that the message is looping, stops the further transfer and non-delivers the message. *Note: The addressing scheme of the MD /C=XX/ADMD=ICAO/PRMD=IUTLAND-X is irrelevant for the loop detection tests IT802. Therefore it does not matter whether the recipient address IUTXLOOP in tests IT802 has CAAS or XF form.*		
Test control:	Verify that: • IUT-C detects that the message is looping, • the message is discarded in IUT-C, • at UA IUTAMHSA a Non-Delivery-Report is received with non-delivery-reason “transfer-failure” and non-delivery-diagnostic-code “loop detected”.		
Test result:	**PASS**	**FAILED**	**INCONCLUSIVE**

IT802	**Loop detection**		
Test-case id: **IT802/TC08**	Tested functionality: IUT-C detects that a message submitted in IUT-B is traversing a loop.		
Test description:	Create a temporary routing loop. The X.400 routing table of IUT-A routes PRMD=IUTLAND-X to IUT-B. The X.400 routing table of IUT-B routes PRMD=IUTLAND-X to IUT-C. The X.400 routing table of IUT-C routes PRMD=IUTLAND-X to IUT-A. Set the loop detection parameters of the IUTs in that way that IUT-C will detect the loop first! From UA IUTBMHSA send a message (IT802/M02) addressed to IUTXLOOP. This message will be routed cyclically so that it is finally performing a loop. IUT-C detects that the message is looping, stops the further transfer and non-delivers the message. *Note: The addressing scheme of the MD /C=XX/ADMD=ICAO/PRMD=IUTLAND-X is irrelevant for the loop detection tests IT802. Therefore it does not matter whether the recipient address IUTXLOOP in tests IT802 has CAAS or XF form.*		
Test control:	Verify that: • IUT-C detects that the message is looping, • the message is discarded in IUT-C, • at UA IUTBMHSA a Non-Delivery-Report is received with non-delivery-reason “transfer-failure” and non-delivery-diagnostic-code “loop detected”.		
Test result:	**PASS**	**FAILED**	**INCONCLUSIVE**

IT802	**Loop detection**		
Test-case id: **IT802/TC09**	Tested functionality: IUT-C detects that a message submitted in IUT-C is traversing a loop.		
Test description:	Create a temporary routing loop. The X.400 routing table of IUT-A routes PRMD=IUTLAND-X to IUT-B. The X.400 routing table of IUT-B routes PRMD=IUTLAND-X to IUT-C. The X.400 routing table of IUT-C routes PRMD=IUTLAND-X to IUT-A. Set the loop detection parameters of the IUTs in that way that IUT-C will detect the loop first! From UA IUTCMHSA send a message (IT802/M03) addressed to IUTXLOOP. This message will be routed cyclically so that it is finally performing a loop. IUT-C detects that the message is looping, stops the further transfer and non-delivers the message. *Note: The addressing scheme of the MD /C=XX/ADMD=ICAO/PRMD=IUTLAND-X is irrelevant for the loop detection tests IT802. Therefore it does not matter whether the recipient address IUTXLOOP in tests IT802 has CAAS or XF form.*		
Test control:	Verify that: • IUT-C detects that the message is looping, • the message is discarded in IUT-C, • at UA IUTCMHSA a Non-Delivery-Report is received with non-delivery-reason “transfer-failure” and non-delivery-diagnostic-code “loop detected”.		
Test result:	**PASS**	**FAILED**	**INCONCLUSIVE**

8. Test message templates

8.1 Test message templates for IUT-A

8.1.1 Input device User Agent (UA): IUTAMHSA

From UA IUTAMHSA	**to UA IUTBMHSA**
Test message ID: IT101M01	PRI: KK FT: <FT> OHI: TEST IT101/TC01
Test message ID: IT101M02	PRI: GG FT: <FT> OHI: TEST IT101/TC02
Test message ID: IT101M03	PRI: FF FT: <FT> OHI: TEST IT101/TC03
Test message ID: IT101M04	PRI: DD FT: <FT> OHI: TEST IT101/TC04
Test message ID: IT101M05	PRI: SS FT: <FT> OHI: TEST IT101/TC05

From UA IUTAMHSA	**to UA IUTBFTNA**
Test message ID: IT301M01	PRI: KK FT: <FT> OHI: TEST IT301/TC01
Test message ID: IT301M02	PRI: GG FT: <FT> OHI: TEST IT301/TC02
Test message ID: IT301M03	PRI: FF FT: <FT> OHI: TEST IT301/TC03

From UA IUTAMHSA	**to UA IUTBFTNA**
Test message ID: IT301M04	PRI: DD FT: <FT> OHI: TEST IT301/TC04
Test message ID: IT301M05	PRI: SS FT: <FT> OHI: TEST IT301/TC05

From UA IUTAMHSA Test message ID: IT501M01	To Primary Recipients: IUTBMHSA and IUTBFTNA PRI: FF FT: <FT> OHI: TEST IT501/TC01
Test message ID: IT501M03	To Primary Recipients: IUTBMHSA and IUTBFTNA To Copy Recipients: IUTBMHSB and IUTBFTNB PRI: FF FT: <FT> OHI: TEST IT501/TC03
Test message ID: IT501M05	To Primary Recipients: IUTBMHSA and IUTBFTNA To Copy Recipients: IUTBMHSB and IUTBFTNB To Blind Copy Recipients: IUTBMHSC and IUTBFTNC PRI: FF FT: <FT> OHI: TEST IT501/TC05
From UA IUTAMHSA Test message ID: IT502M01	To: IUTADLLO PRI: FF FT: <FT> OHI: TEST IT502/TC01
Test message ID: IT502M03	To: IUTBDLRE PRI: FF FT: <FT> OHI: TEST IT502/TC03
From UA IUTAMHSA Test message ID: IT503M01	To: AFTN terminal IUTBFTNA PRI: FF FT: <FT> OHI: TEST IT503/TC01 TEXT 4500 CHARACTERS 1234567890123456789012345678901234567890123456789012345678901234567890123456789 1234567890123456789012345678901234567890123456789012345678901234567890123456789 1234567890123456789012345678901234567890123456789012345678901234567890123456789 … <63 figure lines 1234567890 … 123456789> 1234567890123456789012345678901234567890123456789012345678901234567890123456789 END

From UA IUTAMHSA Test message ID: IT504M01	To IUTBFTNA, IUTBFTNB, IUTBFTNC, IUTBFTND, IUTBFTNE, IUTBFTNF, IUTBFTNG, IUTBFTNH, IUTBFTNI, IUTBFTNJ, IUTBFTNK, IUTBFTNL, IUTBFTNM, IUTBFTNN, IUTBFTNO, IUTBFTNP, IUTBFTNQ, IUTBFTNR, IUTBFTNS, IUTBFTNT, IUTBFTNU, IUTBFTNV, IUTBFTNW, IUTBFTNX, IUTBFTNY, IUTBFTAA, IUTBFTAB, IUTBFTAC, IUTBFTAD, IUTBFTAE, IUTBFTAF, IUTBFTAG, IUTBFTAH, IUTBFTAI, IUTBFTAJ, IUTBFTAK, IUTBFTAL, IUTBFTAM, IUTBFTAN, IUTBFTAO, IUTBFTAP, IUTBFTAQ, IUTBFTAR, IUTBFTAS, IUTBFTAT, IUTBFTAU, IUTBFTAV, IUTBFTAW, IUTBFTAX, IUTBFTAY PRI: FF FT: <FT> OHI: TEST IT504/TC01

8.1.2 Input device AFTN Terminal: IUTAFTNA

From AFTN Terminal IUTAFTNA	**to UA IUTBMHSA**
Test message ID: IT201M01	KK IUTBMHSA <FT> IUTAFTNA TEST IT201/TC01
Test message ID: IT201M02	GG IUTBMHSA <FT> IUTAFTNA TEST IT201/TC02
Test message ID: IT201M03	FF IUTBMHSA <FT> IUTAFTNA TEST IT201/TC03
Test message ID: IT201M04	DD IUTBMHSA <FT> IUTAFTNA TEST IT201/TC04
Test message ID: IT201M05	SS IUTBMHSA <FT> IUTAFTNA TEST IT201/TC05

From AFTN Terminal IUTAFTNA	**to AFTN Terminal IUTBFTNA**
Test message ID: IT401M01	KK IUTBFTNA <FT> IUTAFTNA TEST IT401/TC01
Test message ID: IT401M02	GG IUTBFTNA <FT> IUTAFTNA TEST IT401/TC02
Test message ID: IT401M03	FF IUTBFTNA <FT> IUTAFTNA TEST IT401/TC03

From AFTN Terminal IUTAFTNA	**to AFTN Terminal IUTBFTNA**
Test message ID: IT401M04	DD IUTBFTNA <FT> IUTAFTNA TEST IT401/TC04
Test message ID: IT401M05	SS IUTBFTNA <FT> IUTAFTNA TEST IT401/TC05

8.2 Test message templates for IUT-B

8.2.1 Input device User Agent (UA): IUTBMHSA

From UA IUTBMHSA	**to UA IUTAMHSA**
Test message ID: IT102M01	PRI: KK FT: <FT> OHI: TEST IT102/TC01
Test message ID: IT102M02	PRI: GG FT: <FT> OHI: TEST IT102/TC02
Test message ID: IT102M03	PRI: FF FT: <FT> OHI: TEST IT102/TC03
Test message ID: IT102M04	PRI: DD FT: <FT> OHI: TEST IT102/TC04
Test message ID: IT102M05	PRI: SS FT: <FT> OHI: TEST IT102/TC05

From UA IUTBMHSA	**to AFTN Terminal IUTAFTNA**
Test message ID: IT302M01	PRI: KK FT: <FT> OHI: TEST IT302/TC01
Test message ID: IT302M02	PRI: GG FT: <FT> OHI: TEST IT302/TC02

From UA IUTBMHSA	**to AFTN Terminal IUTAFTNA**
Test message ID: IT302M03	PRI: FF FT: <FT> OHI: TEST IT302/TC03
Test message ID: IT302M04	PRI: DD FT: <FT> OHI: TEST IT302/TC04
Test message ID: IT302M05	PRI: SS FT: <FT> OHI: TEST IT302/TC05

From UA IUTBMHSA Test message ID: IT501M02	To Primary Recipients: IUTAMHSA and IUTAFTNA PRI: FF FT: <FT> OHI: TEST IT501/TC02
Test message ID: IT501M04	To Primary Recipients: IUTAMHSA and IUTAFTNA To Copy Recipients: IUTAMHSB and IUTAFTNB PRI: FF FT: <FT> OHI: TEST IT501/TC04
Test message ID: IT501M06	To Primary Recipients: IUTAMHSA and IUTAFTNA To Copy Recipients: IUTAMHSB and IUTAFTNB To Blind Copy Recipients: IUTAMHSC and IUTAFTNC PRI: FF FT: <FT> OHI: TEST IT501/TC06
From UA IUTBMHSA Test message ID: IT502M02	To: IUTBDLLO PRI: FF FT: <FT> OHI: TEST IT502/TC02
Test message ID: IT502M04	To: IUTADLRE PRI: FF FT: <FT> OHI: TEST IT502/TC04

From UA IUTBMHSA Test message ID: IT503M02	To: AFTN Terminal IUTAFTNA PRI: FF FT: <FT> OHI: TEST IT503/TC02 TEXT 4500 CHARACTERS 1234567890123456789012345678901234567890123456789012345678901234567890123456789 1234567890123456789012345678901234567890123456789012345678901234567890123456789 1234567890123456789012345678901234567890123456789012345678901234567890123456789 … <63 figure lines 1234567890 … 123456789> 1234567890123456789012345678901234567890123456789012345678901234567890123456789 END
From UA IUTBMHSA Test message ID: IT504M02	To: IUTAFTNA, IUTAFTNB, IUTAFTNC, IUTAFTND, IUTAFTNE, IUTAFTNF, IUTAFTNG, IUTAFTNH, IUTAFTNI, IUTAFTNJ, IUTAFTNK, IUTAFTNL, IUTAFTNM, IUTAFTNN, IUTAFTNO, IUTAFTNP, IUTAFTNQ, IUTAFTNR, IUTAFTNS, IUTAFTNT, IUTAFTNU, IUTAFTNV, IUTAFTNW, IUTAFTNX, IUTAFTNY, IUTAFTAA, IUTAFTAB, IUTAFTAC, IUTAFTAD, IUTAFTAE, IUTAFTAF, IUTAFTAG, IUTAFTAH, IUTAFTAI, IUTAFTAJ, IUTAFTAK, IUTAFTAL, IUTAFTAM, IUTAFTAN, IUTAFTAO, IUTAFTAP, IUTAFTAQ, IUTAFTAR, IUTAFTAS, IUTAFTAT, IUTAFTAU, IUTAFTAV, IUTAFTAW, IUTAFTAX, IUTAFTAY PRI: FF FT: <FT> OHI: TEST IT504/TC02

8.2.2 Input device AFTN Terminal: IUTBFTNA

From AFTN Terminal IUTBFTNA	**to UA IUTAMHSA**
Test message ID: IT202M01	KK IUTAMHSA <FT> IUTBFTNA TEST IT202/TC01
Test message ID: IT202M02	GG IUTAMHSA <FT> IUTBFTNA TEST IT202/TC02
Test message ID: IT202M03	FF IUTAMHSA <FT> IUTBFTNA TEST IT202/TC03
Test message ID: IT202M04	DD IUTAMHSA <FT> IUTBFTNA TEST IT202/TC04
Test message ID: IT202M05	SS IUTAMHSA <FT> IUTBFTNA TEST IT202/TC05

From AFTN Terminal IUTBFTNA	**to AFTN Terminal IUTAFTNA**
Test message ID: IT402M01	KK IUTAFTNA <FT> IUTBFTNA TEST IT402/TC01
Test message ID: IT402M02	GG IUTAFTNA <FT> IUTBFTNA TEST IT402/TC02
Test message ID: IT402M03	FF IUTAFTNA <FT> IUTBFTNA TEST IT402/TC03
Test message ID: IT402M04	DD IUTAFTNA <FT> IUTBFTNA TEST IT402/TC04
Test message ID: IT402M05	SS IUTAFTNA <FT> IUTBFTNA TEST IT402/TC05

8.3 Test message templates for multilateral tests

From UA IUTAMHSA Test message ID: IT701M01	To: IUTBMHSA and IUTCMHSA PRI: FF FT: <FT> OHI: TEST IT701/TC01
From UA IUTBMHSA Test message ID: IT701M02	To: IUTAMHSA and IUTCMHSA PRI: FF FT: <FT> OHI: TEST IT701/TC02
From UA IUTCMHSA Test message ID: IT701M03	To: IUTAMHSA and IUTBMHSA PRI: FF FT: <FT> OHI: TEST IT701/TC03

From UA IUTAMHSA Test message ID: IT702M01	To: IUTCMHSA PRI: FF FT: <FT> OHI: TEST IT702/TC01
From UA IUTBMHSA Test message ID: IT702M02	To: IUTAMHSA PRI: FF FT: <FT> OHI: TEST IT702/TC02

From UA IUTCMHSA Test message ID: IT702M03	To: IUTBMHSA PRI: FF FT: <FT> OHI: TEST IT702/TC03

From UA IUTAMHSA Test message ID: IT801M01	To: IUTBMHSA PRI: FF FT: <FT> OHI: TEST IT801/TC01
From UA IUTBMHSA Test message ID: IT801M02	To: IUTCMHSA PRI: FF FT: <FT> OHI: TEST IT801/TC02
From UA IUTCMHSA Test message ID: IT801M03	To: IUTAMHSA PRI: FF FT: <FT> OHI: TEST IT801/TC03

From UA IUTAMHSA Test message ID: IT802M01	To: IUTXLOOP PRI: FF FT: <FT> OHI: TEST IT802/TC01, TC04, TC07
From UA IUTBMHSA Test message ID: IT802M02	To: IUTXLOOP PRI: FF FT: <FT> OHI: TEST IT802/TC02, TC05, TC08
From UA IUTCMHSA Test message ID: IT802M03	To: IUTXLOOP PRI: FF FT: <FT> OHI: TEST IT802/TC03, TC06, TC09

END of Appendix E