EUR AMHS Manual

Appendix D

AMHS Conformance Tests	
Document Reference:	EUR AMHS Manual, Appendix D
Author:	ICAO AFSG PG
Revision Number:	Version 7.0
Date:	26/04/12
Filename:	EUR_AMHS_Manual-Appx_D-v7_0.doc

Document Control Log

Edition	Date	Comments	section/pages affected
0.1	29/08/2005	Creation of the document.	all
0.2	20/11/2005	Renumbering of test procedures (415-417, 423-426), editorial refinements, completion (422, 425, 426, 601-606) of or deletion (former 423) of test procedures, renaming of the Appendix	all
0.3	20/01/2006	Editorial refinements, inclusion of “unknown” test addresses, technical refinements of 202, 305, 405, 411, 421, 503	all, 3.1, 4.2.2, 4.3.5, 4.4.5, 4.4.11, 4.4.21, 4.5.3
0.4	08/03/2006	Reformatting of the notes	all
1.0	27/04/2006	Adopted version (AFSG/9)	
1.1	24/01/2007	Incorporation of PDR consequences and comments coming from performing of Conformance Tests (AUSTROCONTROL, BATSO and DFS): - Enlarging Address Space of AFTNLAND-1, - Adaptation of test procedures caused by resolved PDRs (202, 405, 412, 421) - Editorial refinement of the document and of test procedures (301, 303, 402, 403, 406, 407, 419, 420, 424, 425, 426, 503, 504, 508, 509)	3. 4.2.2, 4.4.5, 4.4.12, 4.4.21, References, 4.3.1, 4.3.3, 4.4.2, 4.4.3, 4.4.6, 4.4.7, 4.4.19, 4.4.20, 4.4.24, 4.4.25, 4.4.26, 4.5.3, 4.5.4, 4.5.8, 4.5.9
1.2	14/03/2007 (16/04/2007)	Incorporation of CP06-001 Typo in reference: 4.4.22 instead of 4.2.2, Typo in CT202, Test scenario: "seven" instead of "six"	~~4.4.2~~ 4.4.22
2.0	26/04/2007	Adopted version (AFSG/10)	
2.1	19/03/2008	Incorporation of CP-AMHSM-08-001, CP-AMHSM-08-002 and CP-AMHSM-08-003	3.1, 3.2, 4.6.1-4.6.6, 4.7, all
3.0	24/04/2008	Adopted version (AFSG/11)	
3.1	17/11/2008	Change of references from ICAO Doc 9705 to ICAO Doc 9880 (CP-AMHS-08-006), editorial improvements	all
3.2	09/02/2009	Incorporation of CP-AMHS-08-009, CP-AMHS-08-010, CP-AMHS-08-011	4.4.10, 4.6.1, 4.6.2

3.3	11/03/2009	Update of the referenced documents	References
4.0	02/04/2009	Adopted version (AFSG/12)	
5.0	17/06/2010	Adopted version (AFSG/14) – without changes	
5.1	25/09/2010	Incorporation of CP-AMHSM-10-001, minor editorial updates	References
5.2	05/11/2010	Incorporation of CP-AMHSM-10-001, Attm2;	4.4.5 / CT405
6.0	14/04/2011	Adopted version (AFSG/15)	
7.0	26/04/2012	Adopted version (AFSG/16) – without changes	

Table of contents

1. INTRODUCTION 8

1.1 PURPOSE OF THE DOCUMENT 8
1.2 DOCUMENT STRUCTURE 8
1.3 TEST IDENTIFICATION SCHEME 8

2. AMHS CONFORMANCE TEST ENVIRONMENT 10

3. ADDRESSING PLAN FOR AMHS CONFORMANCE TESTING 12

3.1 "UNKNOWN" ADDRESSES USED FOR "NEGATIVE TESTING" 15
3.2 AMHS O/R ADDRESSES USED FOR ASYMMETRIC RE-CONVERSION TESTS 18

4. TEST PROCEDURES 20

4.1 SUBMISSION OPERATIONS 20
4.1.1 CT101 - Forward a submitted IPM 20
4.2 DELIVERY OPERATIONS 21
4.2.1 CT201 – Deliver an IPM to a local AMHS user 21
4.2.2 CT202 – Deliver an IPM containing erroneous ATS-message-header or ATS-message-text format 22
4.2.3 CT203 – Deliver an IPM containing empty or invalid IPM heading fields 23
4.3 TRANSFER OPERATIONS 24
4.3.1 CT301 – Transfer messages (IPMs and IPNs) 24
4.3.2 CT302 – Transfer a report 25
4.3.3 CT303 – Transfer a probe 26
4.3.4 CT304– Reject a message, if DL expansion is prohibited 27
4.3.5 CT305– Loop detection 28
4.3.6 CT306– Generate a NDR, if transfer fails 29
4.4 GATEWAY OPERATIONS (AMHS TO AFTN) 30
4.4.1 CT401 – Convert an incoming IPM to AFTN format 30
4.4.2 CT402 – Convert an IPM containing optional-heading-information in the ATS-message-header 31
4.4.3 CT403 – Generate a DR for a successfully translated IPM 33
4.4.4 CT404 – Generate a NDR, if implicit conversion is prohibited 34
4.4.5 CT405 – Generate a NDR, if the ATS-message-header has a syntax error 35
4.4.6 CT406 – Convert or reject an IPM, if the ATS-message-text contains more than 1800 characters 36
4.4.7 CT407 – Convert or reject an IPM, if the ATS-message-text contains lines with more than 69 characters 37
4.4.8 CT408 – Convert or reject an IPM, if the ATS-message-text contains characters not allowed by ICAO Annex 10 38
4.4.9 CT409 – Reject an IPM with multiple body part 39
4.4.10 CT410 – Distribute an IPM to AMHS and AFTN users 40
4.4.11 CT411 – Expand a DL addressing both AMHS and AFTN users 41
4.4.12 CT412 –Split or reject an incoming IPM addressing more than 21 AFTN users 42
4.4.13 CT413 – Remove an unknown address before conversion into AFTN format 43
4.4.14 CT414 – Convert an incoming AFTN acknowledgement 44
4.4.15 CT415 – Incoming AFTN acknowledgement with unknown AFTN originator 45
4.4.16 CT416 – Incoming AFTN acknowledgement relating to a subject message without receipt-notification request 46
4.4.17 CT417 – Incoming AFTN acknowledgement without related subject message 47
4.4.18 CT418 – Convert an AFTN SVC "Unknown Addressee Indicator" to a NDR 48
4.4.19 CT419 – Incoming AFTN SVC "Unknown Addressee Indicator" without related subject message 49
4.4.20 CT420 – Processing of an incoming SVC QTA RPT Message 50
4.4.21 CT421 – Probe Conveyance Test 51
4.4.22 CT422 – Reject an IPM with unsupported content-type 52
4.4.23 CT423 – Processing of the original-encoded-information-types (EIT) 53
4.4.24 CT 424 – Incoming IPM with extended body part of type "ia5-text-body-part" 55
4.4.25 CT425 – Incoming IPM with extended body part type "general-text-body-part" and ISO 646 repertoire 56

4.4.26 CT426 – Incoming IPM with extended body part type "general-text-body-part" and ISO 8859-1 repertoire 58
4.5 GATEWAY OPERATIONS (AFTN TO AMHS) 60
4.5.1 CT501 – Convert an AFTN user message to AMHS format 60
4.5.2 CT502 – Convert an AFTN user message containing optional heading information 62
4.5.3 CT503 – Generate an AFTN service message of the type "Unknown Addressee Indicator" 63
4.5.4 CT504 – Incoming AFTN user message with unknown originator indicator 64
4.5.5 CT505 – Convert a receipt notification 65
4.5.6 CT506 – Incoming non-receipt notification 66
4.5.7 CT507 – Generate a NDR as a result of misrouted RN 67
4.5.8 CT508 – Convert a non-delivery report (NDR) 68
4.5.9 CT509 – NDR conversion process failures 69
4.6 NAMING AND ADDRESSING 70
4.6.1 CT601 – Symmetric address conversion from AMHS CAAS- and XF-addresses to AFTN addresses ..70
4.6.2 CT602 – Address conversion from AFTN addresses to AMHS CAAS- and XF-addresses 72
4.6.3 CT603 – Reject an IPM with invalid recipient address (CAAS like) 74
4.6.4 CT604 – Reject an IPM with invalid recipient address (XF like) 75
4.6.5 CT605 – Reject an IPM with invalid originator address (CAAS like) 76
4.6.6 CT606 – Reject an IPM with invalid originator address (XF like) 78
4.6.7 CT607 – Asymmetric address conversion from AMHS CAAS- and XF-recipient addresses to AFTN addresses 79
4.6.8 CT608 – Asymmetric address conversion from AMHS CAAS- and XF- originator addresses to AFTN addresses 81
4.7 TRANSFER, DELIVERY AND HANDLING OF NON-DELIVERY REPORTS (NDR) 83
4.7.1 CT701 – Transfer a non-delivery report (NDR) 83
4.7.2 CT702 – Deliver a non-delivery report (NDR) to an AMHS user 85
4.7.3 CT703 – Handling of received non-delivery report (NDR) in the AFTN/AMHS gateway 86
4.7.4 CT704 – Transfer a NDR containing non-standard reason or diagnostic codes 87
4.7.5 CT705 – Deliver a NDR containing non-standard reason or diagnostic codes to an AMHS user agent88
4.7.6 CT706 – Handling of NDR containing non-standard reason or diagnostic codes in the AFTN/AMHS gateway 89

References

[1] ICAO Annex 10 – Aeronautical Telecommunications, Volume II: Communication Procedures, Sixth Edition, October 2001

[2] ICAO Doc 9880-AN/466: Manual on Detailed Technical Specifications for the Aeronautical Telecommunication Network (ATN) using ISO/OSI Standards and Protocols, Part II – Ground-Ground Applications - Air Traffic Services Message Handling Services (ATSMHS), First Edition – 2010

[3] EUR Doc 020, EUR AMHS Manual, Appendix C, AMHS Testing Requirements

[4] Aeronautical Communications Panel (ACP), Working Group N – Networking, Subgroup N3 – Ground-Ground Applications, Montreal, 12th-13th May 2005 (Third meeting): Introduction of Standardised Addresses for AMHS Testing (Rev.a), Doc-Ref. ACP-WG N/SGb N3-WP/3-3 Rev.a, 24/Apr/2005

[5] First Multipartite International Realisation of ICAO SARPs AMHS Trials (FIRST), Test Plans for Interoperability Testing, Part 1a: Bilateral Basic Tests

[6] First Multipartite International Realisation of ICAO SARPs AMHS Trials (FIRST), Test Plans for Interoperability Testing, Part 1b: Bilateral Extended Tests

[7] First Multipartite International Realisation of ICAO SARPs AMHS Trials (FIRST), Test Plans for Interoperability Testing, Part 2: Trilateral Network Tests

Table of Figures

FIGURE 1: AMHS CONFORMANCE TEST ENVIRONMENT 10
FIGURE 2: ADDRESSING PLAN 14

List of Tables

TABLE 1: PRMD NAMES AND ADDRESSING SCHEMES 12
TABLE 2: AMHSLAND-2 13
TABLE 3: AFTNLAND-2 13
TABLE 4: GENERIC ADDRESS SPACES OF THE IUT 15
TABLE 5: "UNKNOWN" ADDRESS SPACES FOR MTA ROUTING TESTS 16
TABLE 6: "UNKNOWN" AMHS ADDRESSES FOR MTCU MAPPING TESTS 17
TABLE 7: "UNKNOWN" AFTN ADDRESSES FOR MTCU MAPPING TESTS 17
TABLE 8: MD LOOKUP TABLE SETTINGS OF THE AFTN/AMHS GATEWAY 18
TABLE 9: CAAS TABLE SETTINGS OF THE AFTN/AMHS GATEWAY 18
TABLE 10: AMHS ADDRESSES USED FOR ASYMMETRIC RE-CONVERSION TESTS 19
TABLE 11: CT306 REPORT REQUEST SETTINGS 29
TABLE 12: CT403 REPORT REQUEST SETTINGS 33
TABLE 13: THE ISO 646 (US-ASCII) CHARACTER SET 57
TABLE 14: THE ISO 8859-1 CHARACTER SET 59
TABLE 15: MAPPING OF AFTN PRIORITY INDICATOR FOR THE BASIC ATS MESSAGE HANDLING SERVICE 61
TABLE 16: AMHS NON-DELIVERY-REASON-CODES AND NON-DELIVERY-DIAGNOSTIC-CODES USED IN TEST MESSAGES OF CT701 – CT703 84

1. Introduction

1.1 Purpose of the Document

The purpose of the document is to define the functional tests for an AMHS Conformance Test, which allows checking an AMHS implementation against the AMHS Technical Specifications [2] as a first step to ensure the interoperability between compliant systems.

1.2 Document Structure

Chapter 2 presents the test environment used for AMHS conformance testing.

Chapter 3 defines the addressing plan implemented in the test environment.

Chapter 4 contains the test procedures with subsections for each AMHS functional area. Each test procedure is presented in a structured way consisting of

- defined test criteria,
- a (brief) scenario description,
- reference to the relevant part of the standard specification (Doc 9880 section),
- reference to test classes (N, E_n)

1.3 Test Identification Scheme

Each test procedure has an identifier in the form

CT*xnn*

where CT is an acronym for Conformance Test, *x* is a number identifying the test group [1]and *nn* is a consecutive number identifying the individual test procedure.

Test procedures are presented in six groups:

- test of submission operations (x=1),
- test of delivery operations (x=2),
- test of transfer operations (x=3),
- test of gateway operations converting a user message from AMHS to AFTN (x=4),

[1] Test groups for AMHS conformance tests have been identified in [3].

- test of gateway operations converting a user message from AFTN to AMHS (x=5), and

- tests with special focus on naming and addressing, e.g. address translations between AMHS and AFTN domains (x=6).

2. AMHS Conformance Test Environment

The AMHS Implementation Under Test (IUT) is embedded in a simulated operational environment formed by the AMHS test tool with three MTA instances (representing three adjacent ATS Message Servers or three neighbour PRMDs) and one AFTN/CIDIN source/sink (representing an adjacent AFTN/CIDIN environment).

The IUT has an AMHS user agent (UA) attached, which is used in submission and delivery tests. Gateway tests involve either the AFTN/CIDIN test application or the AFTN user terminal. It is also possible to make use of the IUT's associated Monitor & Control Position – if available - to observe outcomes of the conversion process, especially in error situations.

The AMHS test tool implements three MTA test applications (MTA-1, -2 and -3) to send and receive AMHS messages (IPM, IPN), reports and probes to and from three directions. The test tool generates AMHS data at the X.400/P1 level. It uses the AFTN/CIDIN test application or the AFTN user terminal to send and receive AFTN user messages and AFTN service messages.

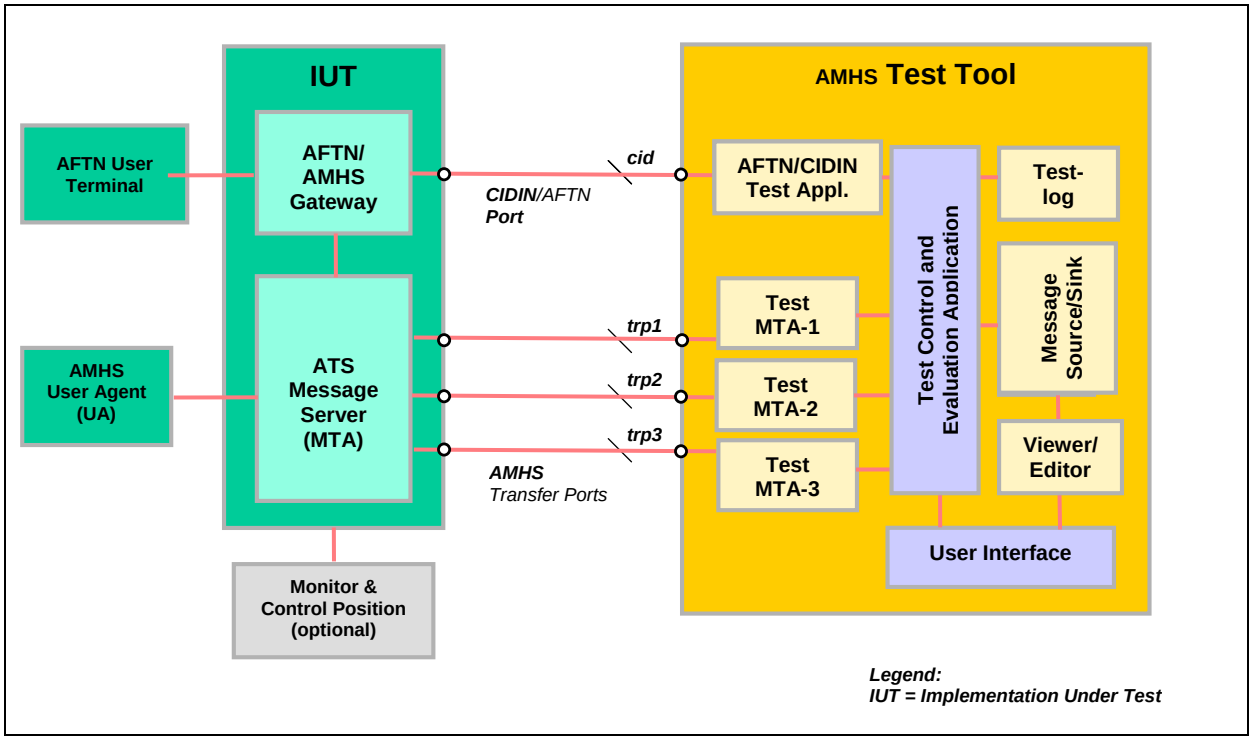

Figure 1: AMHS Conformance Test Environment

Figure 1 shows the test environment used for AMHS conformance tests and the components of the AMHS Test Tool. The AMHS Test Tool will be interconnected with the IUT's (standardized) external interfaces, i.e.

- three AMHS transfer ports (trp1, trp2, trp3) supporting the X.400/P1 protocol over a TCP/IP/LAN[2], and
- a CIDIN/AFTN/X.25 port (cid).

All test applications can be controlled independently via user interface through the Test Control and Evaluation Application. The Test Control and Evaluation Application:

- maintains test samples in a repository (message source)
- executes test scripts,
- verifies the received messages (message sink),
- evaluates each performed test step,
- stores every test step result in a test log, and
- keeps record of all sent and received messages during a test run.

Test scenarios involve the test components as depicted in Figure 1 in the following way:

Submission operation tests:

AMHS User Agent	=>	IUT (ATS Message Server)	=>	MTA-1

Transfer operation tests:

MTA-1	=>	IUT (ATS Message Server)	=>	MTA-2 (and for distribution tests also MTA-3)

Delivery operation tests:

MTA-1	=>	IUT (ATS Message Server)	=>	AMHS User Agent

AMHS to AFTN gateway tests:

MTA-1	=>	IUT (ATS Message Server and Gateway)	=>	AFTN/CIDIN Test Application or AFTN User Terminal

AFTN to AMHS gateway tests:

AFTN/CIDIN Test Application or AFTN User Terminal	=>	IUT (Gateway and ATS Message Server)	=>	MTA-1

[2] Optionally, an ATN stack can be supported instead of the TCP/IP interface to support the AMHS X.400/P1 protocol.

3. Addressing Plan for AMHS Conformance Testing[3]

To meet the scope of testing, the test-address space used by AMHS Conformance Testing should include AMHS addresses placed in different AMHS PRMDs and AFTN addresses located in different countries.

As a minimum, there is a need of three generic PRMDs and three generic AFTN countries which may be called: AMHSLAND-1, AMHSLAND-2, AMHSLAND-3, AFTNLAND-1, AFTNLAND-2 and AFTNLAND-3. If required, an extension of the address space should follow the same principles.

This allows covering of all cases of selected addressing schemes, including:

- CAAS with one single organisation-name value for all location indicators within the PRMD,
- CAAS with multiple organisation-name values for different sets of location indicators within the PRMD,
- XF.

The Nationality Letters AA, AB, AC, BA, BB and BC have been reserved for the purpose of AMHS testing. The PRMD names and addressing schemes used for AMHS Conformance testing are indicated in Table 1:

Nationality Letter	C	ADMD	PRMD	Addressing Scheme
AA	XX	ICAO	AMHSLAND-1	CAAS
AB	XX	ICAO	AMHSLAND-2	CAAS
AC	XX	ICAO	AMHSLAND-3	XF
BA	XX	ICAO	AFTNLAND-1	CAAS
BB	XX	ICAO	AFTNLAND-2	CAAS
BC	XX	ICAO	AFTNLAND-3	XF

Table 1: PRMD names and addressing schemes

The user addresses of AMHSLAND-1 (Addressing scheme: CAAS – single "O" value)

```
C=XX ADMD=ICAO PRMD=AMHSLAND-1
 O=AA-REGION      OU1=AAAA     -> CN=AAAAMHAA till AAAAMHAZ
                                    and
                                    CN=AAAAMHBA till AAAAMHBZ
```

The user addresses of AMHSLAND-2 (Addressing scheme: CAAS – multiple "O" value)

```
C=XX ADMD=ICAO PRMD=AMHSLAND-2
```

[3] adopted by the WGN3 Meeting, Montreal May 2005, cf. [4]

O=AB-REGION1	OU1=ABAA	-> CN=ABAAMHAA till ABAAMHAZ
O=AB-REGION1	OU1=ABAB	-> CN=ABABMHAA till ABABMHAZ
O=AB-REGION2	OU1=ABBA	-> CN=ABBAMHAA till ABBAMHAZ
O=AB-REGION2	OU1=ABBB	-> CN=ABBBMHAA till ABBBMHAZ
O=AB-REGION3	OU1=ABCA	-> CN=ABCAMHAA till ABCAMHAZ
O=AB-REGION3	OU1=ABCB	-> CN=ABCBMHAA till ABCBMHAZ

Table 2: AMHSLAND-2

The user addresses of AMHSLAND-3 (Addressing scheme: XF)

```
C=XX ADMD=ICAO PRMD=AMHSLAND-3
 O=AFTN          OU1=ACCCMHAA  till  ACCCMHAZ   and
                 OU1=ACCCMHBA  till  ACCCMHBZ
```

The user addresses of AFTNLAND-1 (Addressing scheme: CAAS – single "O" value)

```
C=XX ADMD=ICAO PRMD=AFTNLAND-1
 O=BA-REGION     OU1=BAAA    -> CN=BAAAFTAA till BAAAFTZZ
```

The user addresses of AFTNLAND-2 (Addressing scheme: CAAS – multiple "O" value)

```
C=XX ADMD=ICAO PRMD=AFTNLAND-2
```

O=BB-REGION1	OU1=BBAA	-> CN=BBAAFTAA till BBAAFTAZ
O=BB-REGION1	OU1=BBAB	-> CN=BBABFTAA till BBABFTAZ
O=BB-REGION2	OU1=BBBA	-> CN=BBBAFTAA till BBBAFTAZ
O=BB-REGION2	OU1=BBBB	-> CN=BBBBFTAA till BBBBFTAZ
O=BB-REGION3	OU1=BBCA	-> CN=BBCAFTAA till BBCAFTAZ
O=BB-REGION3	OU1=BBCB	-> CN=BBCBFTAA till BBCBFTAZ

Table 3: AFTNLAND-2

The user addresses of AFTNLAND-3 (Addressing scheme: XF)

```
C=XX ADMD=ICAO PRMD=AFTNLAND-3
 O=AFTN          OU1=BCAAFTAA  till  BCAAFTAZ   and
                 OU1=BCAAFTBA  till  BCAAFTBZ
```

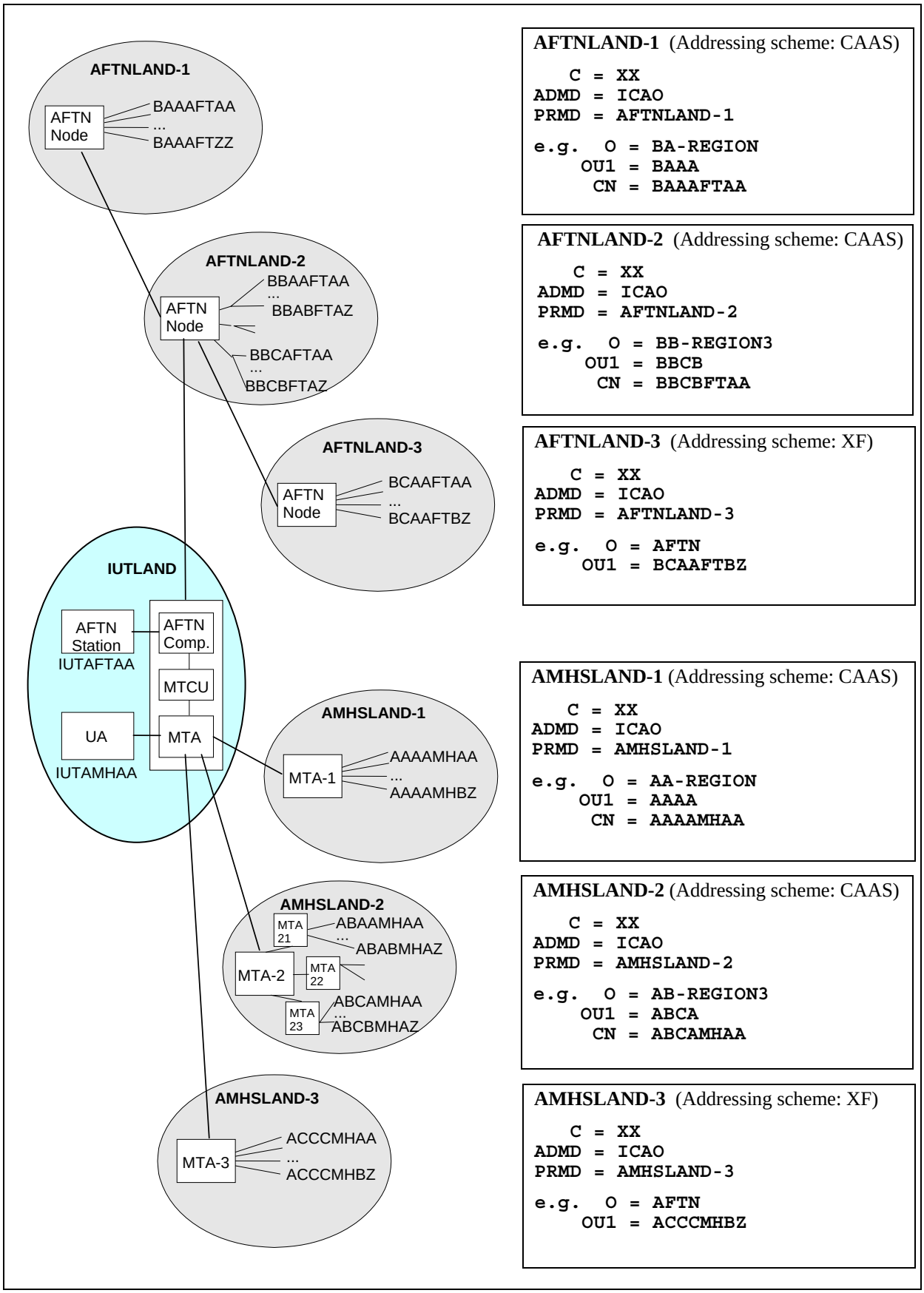

Figure 2: Addressing Plan

For the IUT itself as test addresses could be used alternatively:

The original, operational AMHS and AFTN addresses assigned to the COM Centre or a generic address space taken from the fictitious PRMD/AFTN country IUTLAND including the generic user addresses IUTAFTAA and IUTAMHAA (or a more comprehensive set of addresses in case of CAAS with multiple "O" values) which may be mapped either onto the CAAS (preferred) or XF addressing scheme. The following table shows the generic address space assigned to the IUT.

CAAS (preferred) – single "O"	*C=**XX** ADMD=**ICAO** PRMD=**IUTLAND** O=**IUT-REGION** OU1=**IUTA** CN=**IUTAFTAA*** *C=**XX** ADMD=**ICAO** PRMD=**IUTLAND** O=**IUT-REGION** OU1=**IUTA** CN=**IUTAMHAA***
CAAS (preferred) – multiple "O"	*C=**XX** ADMD=**ICAO** PRMD=**IUTLAND** O=**IUT-REGION1** OU1=**IUTA** CN=**IUTAFTAA** ...* *C=**XX** ADMD=**ICAO** PRMD=**IUTLAND** O=**IUT-REGION1** OU1=**IUTA** CN=**IUTAMHAA*** *C=**XX** ADMD=**ICAO** PRMD=**IUTLAND** O=**IUT REGION2** OU1=**IUTB** CN=**IUTBFTAA** ...* *C=**XX** ADMD=**ICAO** PRMD=**IUTLAND** O=**IUT REGION2** OU1=**IUTB** CN=**IUTBMHAA*** *C=**XX** ADMD=**ICAO** PRMD=**IUTLAND** O=**IUT-REGION3** OU1=**IUTC** CN=**IUTCFTAA** ...* *C=**XX** ADMD=**ICAO** PRMD=**IUTLAND** O=**IUT-REGION3** OU1=**IUTC** CN=**IUTCMHAA***
XF	*C=**XX** ADMD=**ICAO** PRMD=**IUTLAND** O=**AFTN** OU1=**IUTAFTAA*** *C=**XX** ADMD=**ICAO** PRMD=**IUTLAND** O=**AFTN** OU1=**IUTAMHAA***

Table 4: Generic address spaces of the IUT

3.1 “Unknown” addresses used for “negative testing”

Some conformance tests use addresses, which are “unknown” for the IUT and provoke specific reaction, e.g. return of a NDR. Several cases must be distinguished:

a) The AMHS component (MTA) of the IUT is not able to route the message, neither to an AMHS domain, nor to the AFTN/AMHS gateway (MTCU). For example, this occurs, when the global domain identifier does not match any X.400 routing entry (Table 5).

b) The AFTN/AMHS gateway component (MTCU) of the IUT is not able translate the originator or recipient address from AMHS to AFTN (Table 6).

c) The AFTN/AMHS gateway component (MTCU) of the IUT is not able to translate the originator or destination address from AFTN to AMHS (Table 7).

d) The AFTN component of the IUT is not able to route an AFTN message.

Note that AFTN routing is not subject of AMHS conformance tests, and therefore no requirement exists for "unknown" AFTN addresses that do not match a routing indicator in the AFTN routing table.

The following "unknown" addresses may be used in the conformance tests:

"Unknown" AMHS addresses used to test MTA routing
C=XX ADMD=ICAO PRMD=UNKNOWN O=AA-REGION OU1=AAAA CN=AAAAMHAA ... CN=AAAAMHBZ
C=XX ADMD=ICAO PRMD=UNKNOWN O=AB-REGION1 OU1=ABAA CN=ABAAMHAA ... CN=ABAAMHBZ
C=XX ADMD=ICAO PRMD=UNKNOWN O=AFTN OU1=ACCCMHAA ... OU1=ACCCMHBZ

Table 5: "Unknown" address spaces for MTA routing tests

"Unknown" AMHS addresses used to test MTCU mappings from AMHS to AFTN
C=XX ADMD=ICAO PRMD=AFTNLAND-1 O=BA-REGION OU1=BAAA CN=BAAAFTABC
C=XX ADMD=ICAO PRMD=AFTNLAND-1 O=BA-REGION OU1=BAAA CN=BAAAFT
C=XX ADMD=ICAO PRMD=AFTNLAND-1 O=BA-REGION OU1=BAAA CN=
C=XX ADMD=ICAO PRMD=AFTNLAND-1 O=BA-REGION OU1= CN=BAAAFTAA
C=XX ADMD=ICAO PRMD=AFTNLAND-1 O=BA-REGION OU1=BAAX CN=BAAAFTAA
C=XX ADMD=ICAO PRMD=AFTNLAND-1 O= OU1=BAAA CN=BAAAFTAA
C=XX ADMD=ICAO PRMD=AMHSLAND-1 O=AA-REGION OU1=AAAA CN=AAAAMHABC
C=XX ADMD=ICAO PRMD=AMHSLAND-1 O=AA-REGION OU1=AAAA CN=AAAAMH
C=XX ADMD=ICAO PRMD=AMHSLAND-1 O=AA-REGION OU1=AAAA CN=
C=XX ADMD=ICAO PRMD=AMHSLAND-1 O=AA-REGION OU1= CN=AAAAMHAA
C=XX ADMD=ICAO PRMD=AMHSLAND-1 O=AA-REGION OU1=AAAX CN=AAAAMHAA
C=XX ADMD=ICAO PRMD=AMHSLAND-1 O= OU1=AAAA CN=AAAAMHAA

"Unknown" AMHS addresses used to test MTCU mappings from AMHS to AFTN
C=XX ADMD=ICAO PRMD=AFTNLAND-1 O=BA-REGION OU1=BAAAFTAA
C=XX ADMD=ICAO PRMD=AFTNLAND-3 O=AFTN OU1=BCAAFTABC
C=XX ADMD=ICAO PRMD=AFTNLAND-3 O=AFTN OU1=BCAAFT
C=XX ADMD=ICAO PRMD=AFTNLAND-3 O=AFTN OU1=
C=XX ADMD=ICAO PRMD=AFTNLAND-3 O= OU1=BCAAFTAA
C=XX ADMD=ICAO PRMD=AFTNLAND-3 O=ATFM OU1=BCAAFTAA
C=XX ADMD=ICAO PRMD=AMHSLAND-1 O=UNKNOWN OU1=AAAAMHAA
C=XX ADMD=ICAO PRMD=AMHSLAND-3 O=AFTN OU1=ACCCMHABC
C=XX ADMD=ICAO PRMD=AMHSLAND-3 O=AFTN OU1=ACCCMH
C=XX ADMD=ICAO PRMD=AMHSLAND-3 O=AFTN OU1=
C=XX ADMD=ICAO PRMD=AMHSLAND-3 O= OU1=ACCCMHAA
C=XX ADMD=ICAO PRMD=AMHSLAND-3 O=UNKNOWN OU1=ACCCMHAA

Remark: This table contains examples of "unknown" O/R addresses which cannot be converted into AF-addresses.

Table 6: "Unknown" AMHS addresses for MTCU mapping tests

"Unknown" AFTN addresses used to test MTCU mappings from AFTN to AMHS
AAXXXXXX, AAAXXXXX, AAABXXXX,
ABXXXXXX, ABAXXXXX, ABBXXXXX, ABCXXXXX, ABACXXXX, ABABXXXX
ACXXXXXX, ACCXXXXX, ACAAXXXX, ACBAXXXX
BAXXXXXX, BBXXXXXX, BCXXXXXX

Remark: These addresses match a routing indicator in the AFTN routing table, but not any entry of the MD Look-up Table (Table 8).

Table 7: "Unknown" AFTN addresses for MTCU mapping tests

AFTN/AMHS gateway settings

To fulfil the requirements of the "unknown" addresses the following setting of the MD Lookup/CAAS Tables of the AFTN/AMHS gateway (IUT) is requested:

Nationality Letters, Location Indicator	**Mapped to**	**Used addressing scheme**
AAAA	C=XX ADMD=ICAO PRMD=AMHSLAND-1	CAAS
ABAA	C=XX ADMD=ICAO PRMD=AMHSLAND-2	CAAS
ABBA	C=XX ADMD=ICAO PRMD=AMHSLAND-2	CAAS

Nationality Letters, Location Indicator	Mapped to	Used addressing scheme
ABCA	C=XX ADMD=ICAO PRMD=AMHSLAND-2	CAAS
ACCC	C=XX ADMD=ICAO PRMD=AMHSLAND-3	XF
BAAA	C=XX ADMD=ICAO PRMD=AFTNLAND-1	CAAS
BBAA	C=XX ADMD=ICAO PRMD=AFTNLAND-2	CAAS
BBBA	C=XX ADMD=ICAO PRMD=AFTNLAND-2	CAAS
BBCA	C=XX ADMD=ICAO PRMD=AFTNLAND-2	CAAS
BCAA	C=XX ADMD=ICAO PRMD=AFTNLAND-3	XF
IUTA	C=XX ADMD=ICAO PRMD=IUTLAND	CAAS

Table 8: MD Lookup Table settings of the AFTN/AMHS gateway

country-name ADMD-name PRMD-name	organization-name	organizational-unit-name
C=XX ADMD=ICAO PRMD=AMHSLAND-1	O=AA-REGION	OU1=AAAA
C=XX ADMD=ICAO PRMD=AMHSLAND-2	O=AB-REGION1	OU1=ABAA
C=XX ADMD=ICAO PRMD=AMHSLAND-2	O=AB-REGION2	OU1=ABBA
C=XX ADMD=ICAO PRMD=AMHSLAND-2	O=AB-REGION3	OU1=ABCA
C=XX ADMD=ICAO PRMD=AFTNLAND-1	O=BA-REGION	OU1=BAAA
C=XX ADMD=ICAO PRMD=AFTNLAND-2	O=BB-REGION1	OU1=BBAA
C=XX ADMD=ICAO PRMD=AFTNLAND-2	O=BB-REGION2	OU1=BBBA
C=XX ADMD=ICAO PRMD=AFTNLAND-2	O=BB-REGION3	OU1=BBCA
C=XX ADMD=ICAO PRMD=IUTLAND	O=IUT-REGION	OU1=IUTA

Table 9: CAAS Table settings of the AFTN/AMHS gateway

3.2 AMHS O/R addresses used for asymmetric re-conversion tests

Within the AMHS/AFTN address conversion tests the following AMHS addresses are used to demonstrate the robustness of the address conversion of the IUT introduced by the PDR M7100001[4]. The AFTN addresses will be extracted from the original O/R address, but the re-conversions do not result in the same AMHS addresses. These AMHS addresses, the AFTN

[4] To reduce message rejections due to non-symmetrical address conversion, it is necessary to:
a) detect such situations by checking the result of backward conversion of the address and report the error situations,
b) convert the message to AFTN and transfer it, despite the detected non-symmetry.

addresses resulting from conversion and the re-converted AMHS addresses are listed in the following table:

	Used AMHS Address	converted AFTN Address	Re-converted AMHS Address
(1)	C=XX ADMD=ICAO PRMD=AFTNLAND-1 O=BA-REGION OU1=BBAA CN=BBAAFTAA	BBAAFTAA	C=XX ADMD=ICAO PRMD=AFTNLAND-2 O=BB-REGION1 OU1=BBAA CN=BBAAFTAA
(2)	C=XX ADMD=ICAO PRMD=AFTNLAND-2 O=AFTN OU1=BCAAFTAA	BCAAFTAA	C=XX ADMD=ICAO PRMD=AFTNLAND-3 O=AFTN OU1=BCAAFTAA
(3)	C=XX ADMD=ICAO PRMD=AFTNLAND-3 O=AFTN OU1=BCAA CN=BCAAFTAA	BCAAFTAA	C=XX ADMD=ICAO PRMD=AFTNLAND-3 O=AFTN OU1=BCAAFTAA
(4)	C=XX ADMD=ICAO PRMD=AFTNLAND-1 O=AFTN OU1=BAAAFTAA	BAAAFTAA	C=XX ADMD=ICAO PRMD=AFTNLAND-1 O=BA-REGION OU1=BAAA CN=BAAAFTAA
(5)	C=XX ADMD=ICAO PRMD=AMHSLAND-1 O=AA-REGION OU1=ABAA CN=ABAAMHAA	ABAAMHAA	C=XX ADMD=ICAO PRMD=AMHSLAND-2 O=AB-REGION1 OU1=ABAA CN=ABAAMHAA
(6)	C=XX ADMD=ICAO PRMD=AMHSLAND-1 O=AFTN OU1=ACCCMHAA	ACCCMHAA	C=XX ADMD=ICAO PRMD=AFTNLAND-3 O=AFTN OU1=ACCCMHAA
(7)	C=XX ADMD=ICAO PRMD=AMHSLAND-3 O=AFTN OU1=ACCC CN=ACCCMHAA	ACCCMHAA	C=XX ADMD=ICAO PRMD=AMHSLAND-3 O=AFTN OU1=ACCCMHAA
(8)	C=XX ADMD=ICAO PRMD=AMHSLAND-1 O=AFTN OU1=AAAAMHAA	AAAAMHAA	C=XX ADMD=ICAO PRMD=AMHSLAND-1 O=AA-REGION OU1=AAAA CN=AAAAMHAA

Table 10: AMHS addresses used for asymmetric re-conversion tests

4. Test Procedures

4.1 Submission Operations

4.1.1 CT101 - Forward a submitted IPM

CT101	**Forward a submitted IPM**
Test criteria	This test is successful, if the IUT forwards a submitted ATS message (IPM) to a peer MTA correctly.
Scenario description	From the UA send a sequence of five ATS messages (IPMs) to the IUT addressing a remote AMHS user reachable via AMHS transfer port *trp1*. • Message 1 (CT101M01) shall have ATS-message-priority KK. • Message 2 (CT101M02) shall have ATS-message-priority GG. • Message 3 (CT101M03) shall have ATS-message-priority FF. • Message 4 (CT101M04) shall have ATS-message-priority DD. • Message 5 (CT101M05) shall have ATS-message-priority SS. Each message shall have different ATS-filing-time and ATS-message-text. The *optional-heading-information* element shall be empty. Verify the messages received by the test tool at the AMHS interface. Check the format and contents of MTE, IPM heading and body. In particular, verify the priority value contained in the MTE and the following elements contained in the IPM body: • ATS-message-priority, • ATS-message-filing-time, • ATS-message-text.
AMHS ref.: Doc 9880, Part II	3.1 (ATS Message User Agent), 3.2 (ATS Message Server), 3.3.3.7 (ATS-Message-Header)
Test class	Normal AMHS communications (N)

4.2 Delivery Operations

4.2.1 CT201 – Deliver an IPM to a local AMHS user

CT201	**Deliver an IPM to a local AMHS user**
Test criteria	This test is successful, if the IUT correctly delivers an ATS message (IPM) received from a peer MTA to its local AMHS user.
Scenario description	From the AMHS Test Tool send a sequence of five ATS messages (IPMs) to the IUT addressing a local UA. • The first ATS message shall have ATS-message-priority KK. • The second ATS message shall have ATS-message-priority GG. • The third ATS message shall have ATS-message-priority FF. • The fourth ATS message shall have ATS-message-priority DD. • The fifth ATS message shall have ATS-message-priority SS. Each message shall have different ATS-filing-time and ATS-message-text. The optional-heading-information element shall be empty. Verify the messages received at the AMHS user agent. In particular, verify the following elements displayed at the AMHS user agent: • ATS-message-priority, • ATS-message-filing-time, • ATS-message-text.
AMHS Ref.: Doc 9880, Part II	2.6 (AMHS routing)
Test class	Normal AMHS communications (N)

4.2.2 CT202 – Deliver an IPM containing erroneous ATS-message-header or ATS-message-text format

CT202	**Deliver an IPM containing erroneous ATS-message-header or ATS-message-text format**
Test criteria	This test is successful, if the IUT, when receiving an IPM containing erroneous ATS-message-header or ATS-message-text from a peer MTA: • delivers this message to its local AMHS user regardless of the contained error, or • indicates the error situation, or • returns a non-receipt notification or NDR.
Scenario description	From the AMHS Test Tool send a sequence of seven messages (IPMs) to the IUT addressed to a local UA. • The first message (IPM) shall contain an empty ATS-message-priority. • The second message (IPM) shall contain an invalid ATS-message-priority • The third message (IPM) shall contain an empty ATS-message-filing-time. • The fourth message (IPM) shall contain an invalid ATS-message-filing-time. • The fifth message (IPM) shall contain an OHI text longer than 53 characters. • The sixth message (IPM) shall contain an empty ATS-message-header. • The seventh message (IPM) shall contain an empty ATS-message-text. Verify that the messages are delivered to the UA. Analyse the IUT's log files with respect to delivered messages and reported errors, if any. Check the contents of the received ATS message and verify the ATS-message-priority, ATS-message-filing-time and ATS-message-text displayed at the UA[5].
AMHS ref.: Doc 9880, Part II	3.3.3 (IPM text)
Test class	Erroneous AMHS parameters (E1)

[5] The displayed message depends on the UA capabilities

4.2.3 CT203 – Deliver an IPM containing empty or invalid IPM heading fields

CT203	**Deliver an IPM containing empty or invalid IPM heading fields**
Test criteria	This test is successful, if the IUT when receiving an ATS message (IPM) from a peer MTA containing empty or invalid IPM heading fields: • delivers this message to its local AMHS user regardless of the empty or invalid IPM heading fields, or • indicates the error situation, or • returns a non-receipt notification or NDR.
Scenario description	From the AMHS Test Tool send a sequence of messages (IPMs) to the IUT addressing a local UA. The MTE shall be correctly formatted while the IPM heading contains empty or invalid values. • The first message shall contain an empty originator field in the IPM heading. • The second message shall contain neither primary nor copy nor blind copy recipient addresses in the IPM heading. • The third message shall contain a primary recipient with an invalid combination of the notification-request flag (rn bit = true and nrn bit = false). Check the IUT's log files with respect to delivered messages and reported errors, if any. Check any messages received and displayed at the UA[6].
AMHS ref.: Doc 9880, Part II	3.1 (ATS Message User Agent – AMH21)
Test class	Erroneous IPMS information objects (E31)

[6] The displayed message depends on the UA capabilities.

4.3 Transfer Operations

4.3.1 CT301 – Transfer messages (IPMs and IPNs)

CT301	**Transfer messages (IPMs and IPNs)**
Test criteria	This test is successful, if the IUT transfers (forwards) messages (IPMs, IPNs) correctly.
Scenario description	From the AMHS Test Tool send a sequence of messages to the IUT's transfer port *trp1*. All envelopes shall contain a remote recipient address reachable via transfer port *trp2*. All messages shall have the *originator-report-request* flag and the *originating-MTA-report-request* flag set to "non-delivery-report". The sequence of messages shall consist of: • an IPM with ia-5-text body part, • an IPM with general-text body part, • an IPN containing a RN, • an IPN containing a NRN. Monitor the outcome of IUT transfer ports *trp1*, *trp2* and *trp3*. Verify that: • all messages are routed correctly via transfer port *trp2*, and there is no message misrouted, i.e. no output from the IUT at transfer port *trp1* or *trp3*, • there is no NDR returned via *trp1*, • the content of the forwarded message has not changed, but is identical to the original content, • trace information is added in the message transfer envelope (MTE).
AMHS ref.: Doc 9880, Part II	3.2 (ATS message server), 2.2.2 (AMHS information model)
Test class	Normal AMHS communications (N)

4.3.2 CT302 – Transfer a report

CT302	**Transfer a report**
Test criteria	This test is successful, if the IUT transfers (forwards) reports correctly.
Scenario description	From the AMHS Test Tool send two manually prepared reports (a DR and a NDR) to the IUT's transfer port *trp1*. The report transfer envelope shall contain a remote recipient address reachable via transfer port *trp2*. The reports shall contain fictitious values for those fields, which are normally automatically generated from the related subject message, for example, the subject-MTS-identifier and originally intended recipients. Monitor the outcome of IUT transfer ports *trp1*, *trp2* and *trp3*. Verify that: • all reports are routed correctly via transfer port *trp2*, and there is no report misrouted, i.e. no output from the IUT at transfer port *trp1* or *trp3*, • the content of the forwarded report has not changed, but is identical to the original report content, • trace information is added in the report transfer envelope (RTE).
AMHS ref.: Doc 9880, Part II	3.2 (ATS message server), 2.2.2 (AMHS information model)
Test class	Normal AMHS communications (N)

4.3.3 CT303 – Transfer a probe

CT303	**Transfer a probe**
Test criteria	This test is successful, if the IUT transfers (forwards) a probe testing the reachability of a remote AMHS user correctly and returns a NDR, if the probe contains a content-length value which exceeds the length supported by the IUT's MTA component.
Scenario description	From the AMHS Test Tool send two probes to the IUT's transfer port *trp1*. The probe (envelope) shall contain an intended recipient address reachable via transfer port *trp2*. • The first probe shall contain a content length value of 1.048.576 (octets), which is a length, which must be supported by the IUT's MTA component. • The second probe shall contain a content length value of 2.147.483.647 (octets), which is the maximum length in octets specified in X.411:06/1999. It equals the largest integer in 32 bits. Monitor the outcome of IUT transfer ports *trp1*, *trp2* and *trp3*. Verify that: • the first probe is routed correctly via transfer port *trp2*, and there is not any NDR returned from the IUT, • the second probe is either routed correctly via transfer port *trp2* or rejected, if such a length is not supported by the IUT's transfer capabilities. Check, if either a forwarded probe or a NDR is received from the IUT. *Note. – The AMHS Test Tool shall respond with a DR, if it receives a valid probe for a user residing in the test tool's domain.*
AMHS ref.: Doc 9880, Part II	3.2 (ATS message server), 2.2.2 (AMHS information model)
Test class	Normal AMHS communications (N)

4.3.4 CT304– Reject a message, if DL expansion is prohibited

CT304	**Reject a message, if DL expansion is prohibited**
Test criteria	This test is successful, if the IUT distributes a received IPM addressing a distribution list (DL) only, if the *dl-expansion-prohibited* flag is set to "false" and rejects the message, if the *dl-expansion-prohibited* flag is set to "true". In the latter case, the IUT shall return a NDR.
Scenario description	From the AMHS Test Tool send two IPMs to the IUT's transfer port *trp1*. The recipient in the message transfer envelope (MTE) shall address a distribution list. The distribution list, in turn, shall address three remote AMHS users, one reachable via transfer port *trp1*, one reachable via *trp2* and one via *trp3*. The first message shall have the *dl-expansion-prohibited* flag set to "false" and the second to "true". Monitor the outcome of transfer ports *trp1*, *trp2* and *trp3*. Verify that: • only the first message is distributed by the IUT and three messages are received at the AMHS Test Tool, • a NDR is returned to trp1 for the second message.
AMHS ref.: Doc 9880, Part II	3.2.2.1 (DL functional group)
Test class	Normal AMHS communications (N)

4.3.5 CT305– Loop detection

CT305	**Loop detection**
Test criteria	This test is successful, if the IUT detects that the received message, IPN, report and probe have traversed a loop.
Scenario description	Create a temporary routing loop, i.e. modify the routing table in MTA-2 to forward all messages addressed to AMHSLAND-2 to MTA-1, which in turn forwards those messages to the IUT. Configure the loop detection mechanism in the AMHS Test Tool (MTA-1 and MTA-2) to allow a message to run through the loop 32 times. From the AMHS Test Tool send an AMHS message (IPM) to the IUT addressing an AMHS user in AMHSLAND-2. Verify that: • the IUT detects the loop, • discards the message and • sends a NDR (before the test tool detects that the message has traversed the loop 32 times). Repeat the test for an IPN, a report and a probe. The IUT shall detect the loop in all cases and return a NDR for the IPN and the probe (but not for the report).
AMHS ref.: Doc 9880, Part II	1.1.3 (ISO/IEC 10021), *See also ITU-T Rec. X.411 clause 14.3.1 and clause 12.3.1.*
Test class	MHS procedural errors (E2)

4.3.6 CT306– Generate a NDR, if transfer fails

CT306	**Generate a NDR, if transfer fails**
Test criteria	This test is successful, if the IUT correctly generates a NDR, if it can not transfer the received IPM towards the specified recipient.
Scenario description	From the AMHS Test Tool send a sequence of ATS messages (IPMs) to the IUT's transfer port *trp1*. All messages shall contain an unknown primary recipient address and have different combinations of settings for the *originator-report-request* flag and the *originating-mta-report-request* flag according to Table 11. Verify that in all cases the IUT returns a NDR. Verify that the report is always addressed to the originator of the message. Verify that the *originator-report-request* flag setting in the per-recipient-fields of the generated NDR is equal to the setting in the subject message.
AMHS ref.: Doc 9880, Part II	3.2.2.1 (AMH22/AMH11)
Test class	Normal AMHS communications (N)

ATS Message	Value of the originator-report-request element	Value of the originating-MTA-report-request element	Expected result
1	no-report(0)	report(2)	IUT returns a NDR with the *originator-report-request* flag set to no-report(0).
2	non-delivery-report(1)	report(2)	IUT returns a NDR with the *originator-report-request* flag set to non-delivery-report(1).
3	report(2)	report(2)	IUT returns a NDR with the *originator-report-request* flag set to report(2).

Table 11: CT306 report request settings[7]

[7] Note that the originating-MTA-report-request argument shall specify at least the level specified in the originator-report-request (see ITU-T recommendation X.411, clause 12.2.1.1.1.8)

4.4 Gateway Operations (AMHS to AFTN)

4.4.1 CT401 – Convert an incoming IPM to AFTN format

CT401	**Convert an incoming IPM to AFTN format**
Test criteria	This test is successful, if the IUT converts an IPM into AFTN format correctly.
Scenario description	From the AMHS Test Tool send a sequence of ATS messages (IPMs) over AMHS transfer port *trp1* to the IUT addressing an AFTN user. • The first ATS message shall have ATS-message-priority KK. • The second ATS message shall have ATS-message-priority GG. • The third ATS message shall have ATS-message-priority FF. • The fourth ATS message shall have ATS-message-priority DD. • The fifth ATS message shall have ATS-message-priority SS. Each message shall have different ATS-filing-time and ATS-message-text and address an AFTN user reachable via the AFTN/CIDIN port *cid1*. The optional-heading-information element shall be empty[8]. The implicit-conversion-prohibited attribute of the AMHS message must be set to "false". Verify the messages received at the AFTN/CIDIN interface of the AMHS Test Tool. Check the correct format of the AFTN message. Verify the AFTN priority and filing time for each received message. Compare the AFTN message text with the original ATS-message-text.
AMHS ref.: Doc 9880, Part II	4.5.2 (AMHS IPM conversion)
Test class	Normal AMHS communications (N)

[8] There is a separate test case specified, that will test the conversion of the optional-heading-information element.

4.4.2 CT402 – Convert an IPM containing optional-heading-information in the ATS-message-header

CT402	Convert an IPM containing optional-heading-information in the ATS-message-header
Test criteria	This test is successful, if the IUT converts an IPM containing optional-heading-information (OHI) in the ATS-message-header correctly into AFTN format and returns a non-delivery report, if it cannot convert the message, because the OHI text is too long.
Scenario description	From the AMHS Test Tool send a sequence of ATS messages (IPMs) over the AMHS transfer port to the IUT. The sequence of IPMs shall address a remote AFTN user. • The first ATS message shall have FF priority and contain OHI text of less than 53 characters[9]. • The second ATS message shall have FF priority and contain OHI text of exactly 53 characters. • The third ATS message shall have FF priority and contain OHI text of more than 53 characters. • The fourth ATS message shall have SS priority and contain OHI text of less than 48 characters[10]. • The fifth ATS message shall have SS priority and contain OHI text of exactly 48 characters. • The sixth ATS message shall have SS priority and contain OHI text of more than 48 characters. Check the AFTN messages received at the CIDIN/AFTN port and verify the AFTN format. In particular, check the format and contents of the OHI. Verify that the IUT returns a NDR for the third and sixth ATS message containing the following elements (as specified in the Doc 9880, Part II., section 4.5.2.1.5-b): • “unable-to-transfer” for the *non-delivery-reason-code*, • “content-syntax-error” for the *non-delivery-diagnostic-code*, and • “unable to convert to AFTN due to ATS-Message-Header or Heading Fields syntax error” for the supplementary-information.

[9] OHI text of 53 characters is the maximum length for non-SS messages, if the total maximum line length is 69. (Total line length = OHI text + space + 6 digit filing time + space + 8 characters originator indicator)

[10] OHI text of 48 characters is the maximum length for SS messages, if the total maximum line length is 69. (Total line length = OHI text + space + 6 digit filing time + 8 characters originator indicator + 5 characters priority alarm)

AMHS ref.: Doc 9880, Part II	4.5.2.2.10 (OHI), 3.3.3.7.4 – 3.3.3.7.6 (ATS Message Optional Heading Information)
Test class	Normal AMHS communications (N)

4.4.3 CT403 – Generate a DR for a successfully translated IPM

CT403	**Generate a DR for a successfully translated IPM**
Test criteria	This test is successful, if the IUT returns a DR for a successfully translated ATS message (IPM), if a report was requested by the originator or the originating MTA.
Scenario description	From the AMHS Test Tool send a sequence of ATS messages (IPMs) to the IUT addressing an AFTN user. The IPMs shall have ATS-Message-Priority "FF" and different combinations of settings for the *originator-report-request* flag and the *originating-mta-report-request* flag according to Table 12. The IUT shall convert all ATS messages into AFTN format and forward them via the AFTN/CIDIN port *cid1* to the AMHS Test Tool. Check the messages received at the AMHS interface and verify that the IUT sends a DR for every ATS message, if: a) the *originator-report-request* element is set to "report", or b) the originating-mta-report-request element is set to "report" or "audited-report". (see Table 12).
AMHS ref.: Doc 9880, Part II	4.5.6.1.3 (generation of AMHS reports)
Test class	Normal AMHS communications (N)

ATS Message	Value of the originator-report-request element	Value of the originating-MTA-report-request element	Expected result for conformance test CT403
1	no-report(0)	non-delivery-report(1)	IUT does not return a report
2	no-report(0)	report(2)	IUT returns a DR
3	no-report(0)	audited-report(3)	IUT returns a DR
4	non-delivery-report(1)	non-delivery-report(1)	IUT does not return a report
5	non-delivery-report(1)	report(2)	IUT returns a DR
6	non-delivery-report(1)	audited-report(3)	IUT returns a DR
7	report(2)	report(2)	IUT returns a DR
8	report(2)	audited-report(3)	IUT returns a DR

Table 12: CT403 report request settings[11]

[11] Note that the originating-MTA-report-request argument shall specify at least the level specified in the originator-report-request (see ITU-T recommendation X.411, clause 12.2.1.1.1.8)

4.4.4 CT404 – Generate a NDR, if implicit conversion is prohibited

CT404	**Generate a NDR, if implicit conversion is prohibited**
Test criteria	This test is successful, if the IUT rejects a received IPM addressed to an AFTN user, if the *implicit-conversion-prohibited* attribute is set to "true" and generates a NDR.
Scenario description	From the AMHS Test Tool send two ATS messages (IPMs) to the IUT transfer port *trp1*. The IPMs shall have both the *originator-report-request* and the *originating-MTA-report-request* flag set to "non-delivery-report" and contain the recipient address of an AFTN user reachable via the AFTN/CIDIN port *cid1*. The first message shall have the argument *implicit-conversion-prohibited* set to "false" and the second message set to "true". Verify that only the first message is transferred over the AFTN/CIDIN test interface to the AMHS Test Tool, and a NDR is generated for the second message and received by the AMHS Test Tool via the transfer port *trp1*. Verify that this NDR contains the following elements (as specified in the Doc 9880, Part II 4.5.2.1.2): • "conversion-not-performed" for the *non-delivery-reason-code*, • "implicit-conversion-prohibited" for the *non-delivery-diagnostic-code*, and • "unable to convert to AFTN" for the *supplementary-information*.
AMHS ref.: Doc 9880, Part II	4.5.2.1.2
Test class	Normal AMHS communications (N)

4.4.5 CT405 – Generate a NDR, if the ATS-message-header has a syntax error

CT405	**Generate a NDR, if the ATS-message-header has a syntax error**
Test criteria	This test is successful, if the IUT generates a NDR, if it receives an IPM addressed to an AFTN user containing erroneous ATS-message-header or ATS-message-text.
Scenario description	From the AMHS Test Tool send a sequence of seven messages (IPMs) to the IUT addressed to an AFTN user reachable via the IUT's gateway. • The first message (IPM) shall contain an empty ATS-message-priority. • The second message (IPM) shall contain an invalid ATS-message-priority • The third message (IPM) shall contain an empty ATS-message-filing-time. • The fourth message (IPM) shall contain an invalid ATS-message-filing-time. • The fifth message (IPM) shall contain OHI text longer than 53 characters. • The sixth message (IPM) shall contain an empty ATS-message-header. • The seventh message (IPM) shall contain an empty ATS-message-text. Check the messages received at the AMHS- and CIDIN/AFTN-interfaces of the AMHS Test Tool. Verify that the IUT - except for the seventh message[12] - does not convert the received AMHS messages into AFTN, but returns a NDR for each message via its transfer port *trp1*. Verify that all NDRs contains the following elements (as specified in the Doc 9880, Part II, section 4.5.2.1.5-b): • "unable-to-transfer" for the *non-delivery-reason-code*, • "content-syntax-error" for the *non-delivery-diagnostic-code*, and • "unable to convert to AFTN due to ATS-Message-Header or Heading Fields syntax error" for the supplementary-information.
AMHS ref.: Doc 9880, Part II	4.5.2.1.5-b), 3.3.3.7 (ATS Message Header)
Test class	Erroneous AMHS parameters (E1)

[12] Doc 9880, Part II (3.3.3.8) does not exclude an IPM containing empty ATS-message-text.

4.4.6 CT406 – Convert or reject an IPM, if the ATS-message-text contains more than 1800 characters

CT406	**Convert or reject an IPM, if the ATS-message-text contains more than 1800 characters**
Test criteria	This test is successful, if the IUT, when it receives an ATS message with long ATS-message-text of more than 1800 characters, a) rejects the message and returns a NDR, or b) splits the received IPM into several messages and converts the resulting messages into AFTN format as specified in ICAO Annex 10, Attm. B (changed from D to B with Amendment 78) [1]. *Note. – The Doc 9880, Part II (4.5.2.1.7) specify that the message can be rejected (case a) or split into several messages (case b).*
Scenario description	From the AMHS Test Tool send an ATS message (IPM) to the IUT containing ATS-message-text of 4500 characters to an AFTN user recipient. *If case a) is implemented:* Verify that the IUT does not convert the IPM into AFTN format, but returns a NDR. Check the NDR contents received at the TSMS-AMHS interface. Verify that the NDR contains the following elements: • "unable-to-transfer" for the *non-delivery-reason-code*; • "content-too-long" for the *non-delivery-diagnostic-code*; and • "unable to convert to AFTN due to message text length" for the *supplementary-information*. *If case b) is implemented:* Verify that (at least) three AFTN messages are received at the AFTN/CIDIN test interface. Check the correct format of the AFTN messages. Check the text field of all received AFTN messages. Verify that the text is complete and unchanged, i.e. compare the received data with the *ATS-message-text* provided in the original IPM.
AMHS ref.: Doc 9880, Part II	4.5.2.1.7
Test class	Normal AMHS communications (N)

4.4.7 CT407 – Convert or reject an IPM, if the ATS-message-text contains lines with more than 69 characters

CT407	**Convert or reject an IPM, if the ATS-message-text contains lines with more than 69 characters**
Test criteria	This test is successful, if the IUT converts a received IPM containing an ATS-messages-text with lines of more than 69 characters, if *conversion-with-loss-prohibited* is set to "false". Otherwise the IUT shall reject the message and generate a NDR.
Scenario description	From the AMHS Test Tool send two ATS messages (IPMs) to the IUT transfer port. The messages shall have both the *originator-report-request* and the *originating-MTA-report-request* flag set to "non-delivery-report" and contain the recipient address of an AFTN user reachable via the AFTN/CIDIN port *cid1*. The IPM body shall contain ATS-message-text with lines exceeding 69 characters. In the first message the argument *conversion-with-loss-prohibited* shall be set to "false" and in the second message to the value "true". Verify that only messages are received at the AFTN/CIDIN test interface of the AMHS Test Tool, if the *conversion-with-loss-prohibited* was set to "false". Check the correct format of the AFTN message. Verify that an additional line feed has been inserted for every text line exceeding 69 characters. In case of message rejection, verify that a NDR is generated and received by AMHS Test Tool via the transfer port *trp1* with the following values: • "conversion-not-performed" for the *non-delivery-reason-code*, and • "line-too-long" for the diagnostic code.
AMHS ref.: Doc 9880, Part II	4.5.2.1.6 a)
Test class	Normal AMHS communications (N)

4.4.8 CT408 – Convert or reject an IPM, if the ATS-message-text contains characters not allowed by ICAO Annex 10

CT408	**Convert or reject an IPM, if the ATS-message-text contains characters not allowed by ICAO Annex 10**
Test criteria	This test is successful, if the IUT converts a received IPM containing an ATS-messages-text with characters not allowed by ICAO Annex 10, if *conversion-with-loss-prohibited* is set to "false". Otherwise the IUT shall reject the message and generate a NDR.
Scenario description	From the AMHS Test Tool send two ATS messages (IPMs) to the IUT transfer port *trp1*. The messages shall have both the *originator-report-request* and the *originating-MTA-report-request* flag set to "non-delivery-report" and contain the recipient address of an AFTN user reachable via the AFTN/CIDIN port *cid1*. • In the first message the ATS-Message-Text shall contain one or more IA-5 characters that are not allowed by ICAO Annex 10, e.g. the punctuation symbol ";" and have the *conversion-with-loss-prohibited* argument set to "false", • The second message shall contain equal ATS-Message-Text, but have the *conversion-with-loss-prohibited* argument set to "true", Verify that only messages are received at the AFTN/CIDIN test interface of the AMHS Test Tool, if the *conversion-with-loss-prohibited* was set to "false". In such a case, check the converted AFTN message format. In case of message rejection, verify that a NDR is generated and received by AMHS Test Tool via the transfer port *trp1* with the following values: • "conversion-not-performed" for the *non-delivery-reason-code*, and • "punctuation-symbol-loss" for the diagnostic code.
AMHS ref.: Doc 9880, Part II	4.5.2.1.6 c), d) and e)
Test class	Normal AMHS communications (N)

4.4.9 CT409 – Reject an IPM with multiple body part

CT409	**Reject an IPM with multiple body part**
Test criteria	This test is successful, if the IUT generates a NDR, if it receives an IPM addressed to an AFTN user containing multiple body parts.
Scenario description	From the AMHS Test Tool send an ATS message (IPM) to the IUT transfer port *trp1*. The message shall contain two (or more) ia5-text body parts. Verify that a NDR is generated and received by AMHS Test Tool via the transfer port *trp1* with the following elements: • "unable-to-transfer" for the *non-delivery-reason-code*, • "content-syntax-error" for the *non-delivery-diagnostic-code*, and • "unable to convert to AFTN due to multiple body parts" for the *supplementary-information*.
AMHS ref.: Doc 9880, Part II	4.5.2.1.3
Test class	Erroneous AMHS parameters (E1)

4.4.10 CT410 – Distribute an IPM to AMHS and AFTN users

CT410	Distribute an IPM to AMHS and AFTN users
Test criteria	This test is successful, if the IUT distributes an IPM addressing both an AMHS and an AFTN user correctly.
Scenario description	From the AMHS Test Tool send two ATS messages (IPMs) addressing both AMHS and AFTN users to the IUT via transfer port trp1. • The IPM Heading of the first message shall contain two primary recipients, which are one AMHS and one AFTN user and two copy recipients, which are also one AMHS and one AFTN user. All four addresses shall be contained as recipient-names in the Message Transfer Envelope (MTE). • The IPM Heading of the second message shall contain two primary recipients, which are one AMHS and one AFTN user and two blind copy recipients, which are also one AMHS and one AFTN user. Only the two blind-copy addresses shall be contained as recipient-names in the Message Transfer Envelope (MTE). The message shall have the originator-report-request flag set to “non-delivery-report”. Verify that both messages (IPMs) are: • relayed to AMHS transfer port trp2, and • relayed and converted to AFTN format and transferred via the AFTN/CIDIN port cid1. Check the messages received at the AMHS-interface. Verify that: • the first message contains an MTE with all AMHS recipient addresses and an IPM heading with all AMHS and AFTN recipients, and • the second message contains an MTE with the AMHS recipient address, which was the blind-copy recipient and an IPM heading with all AMHS and AFTN recipients. Check the messages received at the AFTN/CIDIN port. Verify that: • the first message contains the addressee indicators of both AFTN users, and • the second message contains the addressee indicator of the AFTN user, which was the blind-copy recipient.
AMHS ref.: Doc 9880, Part II	3.1 (ATS message user agent), 3.2 (ATS message server), 4.5.2 (IPM conversion)
Test class	Normal AMHS communications (N)

4.4.11 CT411 – Expand a DL addressing both AMHS and AFTN users

CT411	**Expand a DL addressing both AMHS and AFTN users**
Test criteria	This test is successful, if the IUT distributes an IPM addressing AMHS and AFTN users in a distribution list correctly.
Scenario description	From the AMHS Test Tool send two ATS messages (IPM) to the IUT transfer port *trp1*. The recipient contained in the MTE, shall address a distribution list, for which the IUT is responsible. The distribution list shall address one AMHS user and two AFTN users. The AMHS user is reachable via the AMHS transfer port *trp2* and the AFTN users are reachable via the CIDIN/AFTN port *cid1*. The first message shall have the *dl-expansion-prohibited* flag set to "false" and the second to "true". Check the messages received at the AMHS and CIDIN/AFTN interfaces of the AMHS Test Tool. Verify that only the first IPM is: • transferred via AMHS transfer port *trp2*, and • converted to AFTN format and transferred via the CIDIN/AFTN port *cid1*. Verify for the first IPM that: • one message is received at the AMHS-interface *trp2* containing (only) the AMHS recipient address in the MTE and the DL recipient address in the IPM heading • one AFTN message is received at the CIDIN/AFTN-interface containing the addresses of both AFTN users Verify for the second message that: • a NDR is returned to *trp1*.
AMHS ref.: Doc 9880, Part II	3.2.2.1 (DL functional group), 4.5.2 (IPM conversion)
Test class	Normal AMHS communications (N)

4.4.12 CT412 –Split or reject an incoming IPM addressing more than 21 AFTN users

CT412	**Split or reject an incoming IPM addressing more than 21 AFTN users**
Test criteria	This test is successful, if the IUT receives an ATS message (IPM) addressing more than 21 AFTN users and a) splits the received IPM into several messages, each addressing 21 or less AFTN users if no more than 512 AFTN users are addressed, or b) rejects the received IPM and returns a NDR if more than 512 AFTN users are addressed. *Note. – With the resolution of PDR M4050004 a message with more than 21, but no more than 512 recipient addresses must not be rejected by the gateway.*
Scenario description	From the AMHS Test Tool send two ATS messages (IPM) to the IUT transfer port *trp1*. The message shall have the *originator-report-request* flag set to "non-delivery-report". • Send one IPM with 512 recipients. Verify that this message is split into 25 AFTN messages, each of the first 24 messages containing 21 addresses, the last one containing 8 addresses. • Send one IPM with 513 recipients. Verify that the IUT does <u>not</u> convert the AMHS message into AFTN format, but returns a NDR via its transfer port *trp1* with the following elements: • "unable-to-transfer" for the *non-delivery-reason-code*, • "too-many-recipients" for the *non-delivery-diagnostic-code*, and • "unable to convert to AFTN due to number of recipients" for the *supplementary-information.*
AMHS ref.: Doc 9880, Part II	4.5.2.1.8
Test class	Normal AMHS communications (N)

4.4.13 CT413 – Remove an unknown address before conversion into AFTN format

CT413	**Remove an unknown address before conversion into AFTN format**
Test criteria	This test is successful, if the IUT that receives an ATS message (IPM) addressed to multiple AFTN users removes any unknown address before conversion.
Scenario description	From the AMHS Test Tool send an ATS message (IPM) to the IUT via AMHS transfer port *trp1*. The message shall have two (primary) recipients addressing two AFTN users. Only the AMHS address of the first AFTN user can be translated by the MTCU into a valid AFTN addressee indicator, the AMHS address of the second AFTN user is unknown and the MTCU can not find a match in its address look-up table. Check the messages received at the AMHS- and CIDIN/AFTN-interfaces of the AMHS Test Tool. Verify that the IUT: • converts the received AMHS message into AFTN format, removes the unknown address and sends it via the CIDIN/AFTN-interfaces *cid1*, • returns a NDR via transfer port *trp1* for the unknown recipient. Verify that the NDR contains the following elements (as specified in the Doc 9880, Part II, section 4.5.2.2.7 d): • “unable-to-transfer” for the *non-delivery-reason-code*, and • “unrecognised-OR-name” for the *non-delivery-diagnostic-code*
AMHS ref.: Doc 9880, Part II	4.5.2.2.7
Test class	Normal AMHS communications (N)

4.4.14 CT414 – Convert an incoming AFTN acknowledgement

CT414	**Convert an incoming AFTN acknowledgement**
Test criteria	This test is successful, if the IUT converts an AFTN acknowledgement (SS ACK message) to a receipt notification correctly.
Scenario description	From the AMHS Test Tool send an ATS message (IPM) via AMHS test interface *trp1* to the IUT addressing a remote AFTN user reachable via the AFTN/CIDIN test interface *cid1*. The IPM shall have the *receipt-notification* request flag activated and the *ATS-message-priority* shall have the value "SS". The IUT shall convert the AMHS message to an AFTN message with priority indicator "SS" and send it via the AFTN/CIDIN test interface *cid1* to the AMHS Test Tool. Upon receipt of the AFTN message, the AMHS Test Tool shall return an AFTN acknowledgement to the IUT (via the AFTN/CIDIN test interface *cid1*). The subject message shall refer to the received AFTN user message. The IUT shall convert this AFTN acknowledgement to an AMHS receipt notification and send it via the AMHS test interface *trp1*. Verify that the AMHS Test Tool receives a receipt notification. In particular, verify that: • the originator indicator contained in the AFTN acknowledgement is translated to the *ipn-originator* (IPN) and the *originator-name* (MTE), • the *receipt-time* of the IPN is generated from the *filing time* of the AFTN acknowledgement, • the value of the *priority* element in the MTE is set to "urgent", • the values of *subject-ipm* and *recipient-name* are inserted correctly from log entries.
AMHS ref.: Doc 9880, Part II	4.4.3 (conversion AFTN acknowledgement messages)
Test class	Normal AMHS communications (N)

4.4.15 CT415 – Incoming AFTN acknowledgement with unknown AFTN originator

CT415	**Incoming AFTN acknowledgement with unknown AFTN originator**
Test criteria	This test is successful, if the IUT informs its control position, when the AFTN acknowledgement (SS ACK message) can not be converted because the AFTN originator is unknown.
Scenario description	From the AMHS Test Tool send an ATS message (IPM) via AMHS test interface *trp1* to the IUT addressing a remote AFTN user reachable via the AFTN/CIDIN test interface *cid1*. The IPM shall have the *receipt-notification* request flag activated and the *ATS-message-priority* shall have the value "SS". The IUT shall convert the AMHS message to an AFTN message with priority indicator "SS" and send it via the AFTN/CIDIN test interface *cid1* to the AMHS Test Tool. Upon receipt of the AFTN message, the AMHS Test Tool shall return an AFTN acknowledgement (SS ACK) to the IUT (via the AFTN/CIDIN test interface *cid1*). The subject message shall refer to the received AFTN user message, but the originator of the AFTN acknowledgement (SS ACK) message shall be unknown to the IUT, i.e. not contained in any of the IUT's conversion or address mapping tables. Check the output of the IUT at the AMHS test interfaces and the control position. Verify that the IUT does not send any IPM nor IPN via the AMHS transfer port, but reports the error situation to the control position.
AMHS ref.: Doc 9880, Part II	4.4.3.2.3
Test class	Erroneous AMHS parameters (E1)

4.4.16 CT416 – Incoming AFTN acknowledgement relating to a subject message without receipt-notification request

CT416	**Incoming AFTN acknowledgement relating to a subject message without receipt-notification request**
Test criteria	This test is successful, if the IUT encapsulates a received AFTN acknowledgement (SS ACK message) into an IPM, if the subject message did not have the receipt notification flag set.
Scenario description	From the AMHS Test Tool send an ATS message (IPM) via AMHS test interface *trp1* to the IUT addressing a remote AFTN user reachable via the AFTN/CIDIN test interface *cid1*. The message shall have the *ATS-message-priority* set to "SS", however, the *receipt-notification-request* shall be deactivated. The IUT shall convert the AMHS message into an AFTN message with priority indicator "SS" and send it over the AFTN/CIDIN test interface *cid1* to the AMHS Test Tool. Upon receipt of the AFTN user message the AMHS Test Tool shall return an AFTN SS acknowledgement to the IUT with the subject message relating to the previously received AFTN user message. Since the initial ATS message (IPM) did not have the *receipt-notification-request* activated, the IUT shall not convert the AFTN acknowledgement into a RN, but encapsulate the AFTN acknowledgement into an IPM, instead. Check the output of the IUT at the AMHS test interface *trp1* and the control position. Verify that the IUT sends an ATS message (IPM) with the addressed AMHS user as recipient. Verify that the message contains the original AFTN acknowledgement in the ATS-message-text of the IPM body.
AMHS ref.: Doc 9880, Part II	4.4.3.1.2
Test class	MHS procedural errors (E2), Erroneous IPMS information objects (E31)

4.4.17 CT417 – Incoming AFTN acknowledgement without related subject message

CT417	Incoming AFTN acknowledgement without related subject message
Test criteria	This test is successful, if the IUT encapsulates a received AFTN acknowledgement (SS ACK message) into an IPM, if the subject message did not pass the gateway before.
Scenario description	From the AMHS Test Tool send an AFTN acknowledgement (SS ACK message) via the AFTN/CIDIN test interface *cid1* to the IUT addressing an AMHS user. The AFTN acknowledgement shall have a fictitious origin subject message in the message text. Check the output of the IUT at the AMHS transfer port and the control position. Verify that the IUT sends an IPM with the addressed AMHS user as recipient. Verify that the IPM contains the original AFTN acknowledgement in the ATS-message-text of the IPM body.
AMHS ref.: Doc 9880, Part II	4.4.3.1.1
Test class	MHS procedural errors (E2), Erroneous IPMS information objects (E31)

4.4.18 CT418 – Convert an AFTN SVC "Unknown Addressee Indicator" to a NDR

CT418	**Convert an AFTN SVC "Unknown Addressee Indicator" to a NDR**
Test criteria	This test is successful, if the IUT converts a received AFTN service message (SVC) of type "Unknown Addressee Indicator" to a NDR correctly.
Scenario description	From the AMHS Test Tool send an ATS message (IPM) via AMHS test interface *trp1* to the IUT addressing a remote AFTN user reachable via the AFTN/CIDIN test interface *cid1*. The IUT shall convert the IPM to an AFTN user message and send it over AFTN/CIDIN test interface *cid1* to the AMHS Test Tool. Upon receipt of the AFTN user message the AMHS Test Tool shall return an AFTN service message of type "Unknown Addressee Indicator" to the IUT that relates to the formerly received message. The IUT shall convert this AFTN service message to a NDR. Verify that a NDR is generated (as specified in the Doc 9880, Part II, section 4.4.4) and received by AMHS Test Tool via the AMHS test interface *trp1* with the following elements: • for the report-destination-name the *originator-name* of the subject AMHS message, for the subject-identifier the *message-identifier* of the subject AMHS message, for the actual-recipient-name the *unknown addressee indicator* reported with the SVC, "unable-to-transfer" for the *non-delivery-reason-code*, and • "unrecognised-OR-name" for the *non-delivery-diagnostic-code*.
AMHS ref.: Doc 9880, Part II	4.4.4 (conversion AFTN SVC ADS unknown)
Test class	Normal AMHS communications (N)

4.4.19 CT419 – Incoming AFTN SVC "Unknown Addressee Indicator" without related subject message

CT419	**Incoming AFTN SVC "Unknown Addressee Indicator" without related subject message**
Test criteria	This test is successful, if the IUT encapsulates a received AFTN service message (SVC) of type "Unknown Addressee Indicator" into an IPM, if the subject message did not pass the gateway before.
Scenario description	From the AMHS Test Tool send an AFTN service message of type "Unknown Addressee Indicator" to the IUT addressing an AMHS user. The AFTN service message shall have a fictitious origin subject message in the message text. Check the output of the IUT at the AMHS transfer port. Verify that the IUT sends an IPM with the addressed AMHS user as recipient. Verify that the IPM contains the original AFTN SVC in the IPM body (ATS-message-text).
AMHS ref.: Doc 9880, Part II	4.4.4.1.1 b)
Test class	Normal AMHS communications (N)

4.4.20 CT420 – Processing of an incoming SVC QTA RPT Message

CT420	**Processing of an incoming SVC QTA RPT Message**
Test criteria	This test is successful, if the IUT sends an AFTN user message a second time, if it receives an SVC QTA RPT message.
Scenario description	From the AMHS Test Tool send an ATS message (IPM) to the IUT addressing an AFTN user. The IUT shall convert the message into AFTN format and send it over the AFTN/CIDIN test interface to the AMHS Test Tool. Upon receipt of the AFTN user message the AMHS Test Tool shall return an AFTN service message of type QTA RPT related to the previously received AFTN message. Verify that the IUT does not translate the AFTN service message into an IPM, but processes the QTA RPT so that the previous message is sent to the AFTN user (automatically or by operator intervention) a second time.
AMHS ref.: Doc 9880, Part II	4.2.1.12
Test class	Normal AMHS communications (N)

4.4.21 CT421 – Probe Conveyance Test

CT421	Probe Conveyance Test
Test criteria	This test is successful, if the IUT (receiving a probe with an AFTN user as intended recipient) generates a DR, if conversion to AFTN is possible or an NDR, if conversion to AFTN is not possible.
Scenario description	From the AMHS Test Tool send a sequence of AMHS probes to the IUT. • Probe 1 shall specify a content-length of 1800 and address an AFTN user recipient reachable via the AFTN/AMHS gateway. • Probe 2 shall specify a content-length of 1800 and address an AFTN user recipient, which is routed by the IUT via the gateway (MTCU), but which can not be mapped onto a valid AFTN address by the MTCU. • Probe 3 shall specify a content-length of 1800 and address two AFTN user recipients, one which can be mapped and one which can not be mapped onto a valid AFTN address. • Probe 4 shall specify a content-length of 10.000 and address an AFTN user recipient reachable via the AFTN/AMHS gateway. • Probe 5 shall specify a content-length of 100.000 and address an AFTN user recipient reachable via the AFTN/AMHS gateway. • Probe 6 shall have a recipient argument addressing 512 AFTN users. • Probe 7 shall have a recipient argument addressing more than 512 AFTN users. Check the messages received at the AMHS Test Tool-AMHS interface. Verify that the IUT returns a report for each probe. Check the report contents and determine if it is a DR, NDR or combined report: • A DR shall be returned in response to probe 1. • A NDR shall be returned in response to probe 2. • A DR and NDR (one combined report or two reports) shall be returned in response to probe 3. • Depending on the gateway's capabilities, a DR or NDR shall be returned for probe 4 and 5. • A DR shall be returned for Probe 6. • A NDR shall be returned for Probe 7.
AMHS ref.: Doc 9880, Part II	4.5.5 (reception of AMHS Probe)
Test class	Normal AMHS communications (N)

4.4.22 CT422 – Reject an IPM with unsupported content-type

CT422	Reject an IPM with unsupported content-type
Test criteria	This test is successful, if the IUT's gateway component rejects an incoming message of content-type other than IPM 88 and generates a NDR.
Scenario description	From the AMHS Test Tool send a sequence of messages to the IUT via transfer port *trp1* addressed to an AFTN user recipient. The messages shall have different values for the content-type contained in the MTE. • The 1st message shall contain a *built-in content-type* value "interpersonal-messaging-1988(22)". • The 2nd message shall contain a *built-in content-type* value "interpersonal-messaging-1984(2)". • The 3rd message shall contain a *built-in content-type* value "edi-messaging(35)". • The 4th message shall contain a *built-in content-type* value "unidentified(0)". All messages shall contain an IPM body with ATS-message-header and ATS-message-text.[13] Verify that the IUT accepts and converts the 1st message, but rejects 2nd, the 3rd and 4th message. Verify that the IUT returns a NDR for the 2nd, 3rd and 4th message containing: • "unable-to-transfer" for the *non-delivery-reason-code*, and • "content-type-not-supported" for the *non-delivery-diagnostic-code*.
AMHS ref.: Doc 9880, Part II	4.5.1.1
Test class	Normal AMHS communications (N), Erroneous AMHS parameters (E1)

[13] It is assumed that MTAs on the relay path do not verify the specified content-type against the contained body part(s) and transfer all type of messages towards the gateway (MTCU).

4.4.23 CT423 – Processing of the original-encoded-information-types (EIT)

CT423	Processing of the original-encoded-information-types (EIT)
Test criteria	This test is successful, if the IUT's gateway component evaluates the original-encoded-information-types contained in the incoming ATS message and: • accepts (and converts) the message, if it contains one of those values specified in section 4.5.2.1.1 of the Doc 9880, Part II, or • rejects the message, if it does not contain any of those values and generates a NDR.
Scenario description	From the AMHS Test Tool send a sequence of ATS messages (IPMs) over AMHS transfer port *trp1* to the IUT addressing an AFTN user. The messages shall have the following values for the *original-encoded-information-types* (EIT) contained in the Message Transfer Envelope (MTE) • The 1st message shall contain *built-in-encoded-information-types* with value "ia5-text(2)". • The 2nd message shall contain *built-in-encoded-information-types* with value "unknown(0)". • The 3rd message shall contain *extended-encoded-information-types* with OID "2.6.3.4.2" for ia5-text information types. • The 4th message shall contain *extended-encoded-information-types* with OID "2.6.3.4.0" for unknown information types. • The 5th message shall contain *extended-encoded-information-types* with OID {id-cs-eit-authority 1}. • The 6th message shall contain *extended-encoded-information-types* with OID {id-cs-eit-authority 1} and OID {id-cs-eit-authority 6}. • The 7th message shall contain *extended-encoded-information-types* with OID {id-cs-eit-authority 1}, OID {id-cs-eit-authority 6} and OID {id-cs-eit-authority 100}. • The 8th message shall contain *extended-encoded-information-types* with (invalid) OID {id-cs-eit-authority 3}. • The 9th message shall contain *extended-encoded-information-types* with OID {id-cs-eit-authority 1}, OID {id-cs-eit-authority 6} and (invalid) OID {id-cs-eit-authority 7}. • The 10th message shall contain *built-in-encoded-information-types* with value "ia5-text(2)" and *extended-encoded-information-types* with OID "2.6.3.4.2" for ia5-text as well as OID {id-cs-eit-authority 1} and OID {id-cs-eit-authority 6}. The messages shall contain a body part corresponding to the (first valid) *original-encoded-information-types* value. Verify that all messages with valid EIT argument are accepted by the IUT's gateway component, converted to AFTN format and received at the

	AFTN/CIDIN test interface of the AMHS Test Tool. Verify that all messages with any invalid EIT argument are rejected by the IUT and a NDR is returned via transfer port *trp1* with the following elements: • "unable-to-transfer" for the *non-delivery-reason-code*, and • "encoded-information-types-unsupported" for the *non-delivery-diagnostic-code*.
AMHS ref.: Doc 9880, Part II	4.5.2.1.1
Test class	Normal AMHS communications (N) and Erroneous AMHS parameters (E1)

4.4.24 CT 424 – Incoming IPM with extended body part of type "ia5-text-body-part"

CT424	**Incoming IPM with extended body part of type "ia5-text-body-part"**
Test criteria	This test is successful, if the IUT's gateway component accepts a received ATS message (IPM) with extended body part of type "ia5-text-body-part" and converts the IPM into AFTN format correctly.
Scenario description	From the AMHS Test Tool send a sequence of ATS messages (IPMs) over AMHS transfer port *trp1* to the IUT addressing an AFTN user. • The first message shall contain an extended body part of type "ia5-text-body-part", which includes an ATS-message-header and ATS-message-text with IA5-text characters. The *original-encoded-information-types* attribute shall contain *extended-encoded-information-types* with OID "2.6.3.4.2" (ia5-text). • The second message shall be equal except for the *original-encoded-information-types*, which has a built-in value for ia5-text(2)[14]. • The third message shall be equal to the first, but the *repertoire* argument in the body shall be different from ia5(5). • The fourth message shall be equal to the first, but the body part data shall contain characters different from IA5String, e.g. special characters of local language – as in German "ä", "ö" and "ü" or in French "é". Verify that the first and second message are accepted by the IUT's gateway component, converted to AFTN format and received at the AFTN/CIDIN test interface of the AMHS Test Tool. Check whether the other messages are converted into AFTN format or rejected by the IUT. In case of rejection verify that an NDR is returned via transfer port *trp1* with the following elements: • "unable-to-transfer" for the *non-delivery-reason-code*, • "content-syntax-error" for the *non-delivery-diagnostic-code*, and • "unable to convert to AFTN due to unsupported body part type" for the *supplementary-information*.
AMHS ref.: Doc 9880, Part II	4.5.2.1.4 a) 2)
Test class	Normal AMHS communications (N)

[14] It is assumed that an extended ia5-text-body-part can be associated with either a built-in EIT or extended EIT value for ia5-text.

4.4.25 CT425 – Incoming IPM with extended body part type "general-text-body-part" and ISO 646 repertoire .

CT425	Incoming IPM with extended body part type "general-text-body-part" and ISO 646 repertoire
Test criteria	This test is successful, if the IUT's gateway component accepts a received ATS message (IPM) with extended body part type "general-text-body-part" of which the repertoire set description is Basic (ISO 646) and converts the IPM into AFTN format correctly.
Scenario description	From the AMHS Test Tool send a sequence of ATS messages (IPMs) over AMHS transfer port *trp1* to the IUT addressing an AFTN user recipient. All messages shall contain an extended body part of type "general-text-body-part", which includes an ATS-message-header and ATS-message-text with general-text data. The *original-encoded-information-types* shall be set to *extended-encoded-information-types* with OID {id-cs-eit-authority 1} and OID {id-cs-eit-authority 6}. The message text (data part) shall include ISO 646 (US-ASCII) characters, only. The parameter argument in the IPM body part shall specify the following character sets: • The 1st message shall contain character set registration numbers 1 and 6, which specify the Basic ISO 646 repertoire. • The 2nd message shall contain character set registration numbers 1 and 5. • The 3rd message shall contain character set registration numbers 2 and 5. • The 4th message shall contain an empty set of character registration. The message text (data part) shall include ISO 646 (US-ASCII – see Table 13) characters, only. Verify that only the first message is accepted by the IUT's gateway component, converted to AFTN format and received at the CIDIN/AFTN interface of the AMHS Test Tool. Analyse the received AFTN messages with respect to the AFTN message text. Verify that all other messages are rejected by the IUT and an NDR is returned via transfer port *trp1* with the following elements: • "unable-to-transfer" for the *non-delivery-reason-code*, • "content-syntax-error" for the *non-delivery-diagnostic-code*, and • "unable to convert to AFTN due to unsupported body part type" for the *supplementary-information*.
AMHS ref.: Doc 9880, Part II	4.5.2.1.4 a) 3)
Test class	Normal AMHS communications (N) and Erroneous AMHS parameters (E1)

20	21 !	22 "	23 #	24 $	25 %	26 &	27 '	28 (	29)	2A *	2B +	2C ,	2D -	2E .	2F /
30 0	31 1	32 2	33 3	34 4	35 5	36 6	37 7	38 8	39 9	3A :	3B ;	3C <	3D =	3E >	3F ?
40 @	41 A	42 B	43 C	44 D	45 E	46 F	47 G	48 H	49 I	4A J	4B K	4C L	4D M	4E N	4F O
50 P	51 Q	52 R	53 S	54 T	55 U	56 V	57 W	58 X	59 Y	5A Z	5B [	5C \	5D]	5E ^	5F _
60 `	61 a	62 b	63 c	64 d	65 e	66 f	67 g	68 h	69 i	6A j	6B k	6C l	6D m	6E n	6F o
70 p	71 q	72 r	73 s	74 t	75 u	76 v	77 w	78 x	79 y	7A z	7B {	7C |	7D }	7E ~	

Table 13: The ISO 646 (US-ASCII) character set

4.4.26 CT426 – Incoming IPM with extended body part type "general-text-body-part" and ISO 8859-1 repertoire .

CT426	**Incoming IPM with extended body part type "general-text-body-part" and ISO 8859-1 repertoire**
Test criteria	This test is successful, if the IUT's gateway component processes a received ATS message (IPM) with extended body part type "general-text-body-part" of which the repertoire set description is Basic-1 (ISO 8859-1) according to its local AMHS Management Domain policy. *Note. – Depending on the local policy of the AMHS Management Domain a received message with extended body part type "general-text-body-part" of which the repertoire set description is Basic-1 (ISO 8859-1) can be converted or rejected.*
Scenario description	From the AMHS Test Tool send a sequence of ATS messages (IPMs) over AMHS transfer port *trp1* to the IUT addressing an AFTN user recipient. All messages shall contain an extended body part of type "general-text-body-part", which includes an ATS-message-header and ATS-message-text with general-text data. The *original-encoded-information-types* shall be set to *extended-encoded-information-types* with OID {id-cs-eit-authority 1}, OID {id-cs-eit-authority 6} and OID {id-cs-eit-authority 100}. The message text (data part) shall include ISO 8859-1 characters (Latin-1, Western Europe – see Table 14). The parameter argument in the IPM body part shall specify the following character sets: • The 1st message shall contain character set registration numbers 1, 6 and 100 which specify the ISO 8859-1 repertoire. • The 2nd message shall contain character set registration numbers 1 and 6, which specify the Basic ISO 646 repertoire. • The 3rd message shall contain an empty set of character registration. The characters used in the message text (data part) shall be equal for all messages. Check, if the messages are converted or rejected by the IUT according to its local policy. In case of conversion, analyse the received AFTN messages with respect to the characters contained in the AFTN message text. In case of message rejection, check, if the NDR returned via transfer port *trp1* contains the following elements: • "unable-to-transfer" for the *non-delivery-reason-code*, • "content-syntax-error" for the *non-delivery-diagnostic-code*, and • "unable to convert to AFTN due to unsupported body part type" for the *supplementary-information*.
AMHS ref.: Doc 9880, Part	4.5.2.1.4 a) 4) 4.5.2.1.4 b)

II	
Test class	Normal AMHS communications (N) and Erroneous AMHS parameters (E1)

A0	A1 ¡	A2 ¢	A3 £	A4 ¤	A5 ¥	A6 ¦	A7 §	A8 ¨	A9 ©	AA ª	AB «	AC ¬	AD -	AE ®	AF ¯
B0 °	B1 ±	B2 ²	B3 ³	B4 ´	B5 µ	B6 ¶	B7 ·	B8 ¸	B9 ¹	BA º	BB »	BC ¼	BD ½	BE ¾	BF ¿
C0 À	C1 Á	C2 Â	C3 Ã	C4 Ä	C5 Å	C6 Æ	C7 Ç	C8 È	C9 É	CA Ê	CB Ë	CC Ì	CD Í	CE Î	CF Ï
D0 Ð	D1 Ñ	D2 Ò	D3 Ó	D4 Ô	D5 Õ	D6 Ö	D7 ×	D8 Ø	D9 Ù	DA Ú	DB Û	DC Ü	DD Ý	DE Þ	DF ß
E0 à	E1 á	E2 â	E3 ã	E4 ä	E5 å	E6 æ	E7 ç	E8 è	E9 é	EA ê	EB ë	EC ì	ED í	EE î	EF ï
F0 ð	F1 ñ	F2 ò	F3 ó	F4 ô	F5 õ	F6 ö	F7 ÷	F8 ø	F9 ù	FA ú	FB û	FC ü	FD ý	FE þ	FF ÿ

Table 14: The ISO 8859-1 character set

4.5 Gateway Operations (AFTN to AMHS)

4.5.1 CT501 – Convert an AFTN user message to AMHS format

CT501	**Convert an AFTN user message to AMHS format**
Test criteria	This test is successful, if the IUT converts an AFTN user message to an AMHS message (IPM) correctly.
Scenario description	From the AMHS Test Tool send a sequence of AFTN user messages over the AFTN/CIDIN test interface to the IUT. The sequence of AFTN user messages shall address a remote AMHS user and consist of five messages, one for each AFTN priority, i.e. SS, DD, FF, GG, KK. The filing time shall be different for each message and the OHI field shall be empty for all messages[15]. Check the IPMs that the AMHS Test Tool receives from the IUT via the AMHS transfer port. Verify that the IUT has converted the messages correctly according to Table 4-3 of the Doc 9880, Part II – see section 4.4.2. Check message envelopes and contents. In particular, verify that: • the *ATS-message-header* and *ATS-message-text* in the IPM body part has the correct format, • the AFTN message text is correctly inserted in the *ATS-message-text* field, • the AFTN message priority is correctly inserted in the *ATS-message-priority* field, • that the IUT has translated the AFTN priority indicator and inserted the correct priority in the message transfer envelope (MTE) – see Table 15, • the addressee indicator is correctly translated in the corresponding AMHS OR address and entered as *primary-recipient* in the IPM heading and as *recipient-name* in the MTE, • the AFTN originator is translated in the AMHS OR address which was registered for identification of the AFTN originator in the AMHS and allocated to the elements *originator* (MTE), *originator-name* and the sub-component user of the element *this-IPM* (IPM heading), • the filing time is correctly inserted in the *ATS-message-header*.
AMHS ref.: Doc 9880, Part II	4.4.2
Test class	Normal AMHS communications (N)

[15] Conversion of the optional-heading-information element is subject to another test.

AFTN Priority Indicator	AMHS MTE priority	AMHS ATS-Message-Priority priority-indicator
SS	urgent	SS
DD	normal	DD
FF	normal	FF
GG	non-urgent	GG
KK	non-urgent	KK

Table 15: Mapping of AFTN Priority Indicator for the Basic ATS Message Handling Service[16]

[16] The mapping of the AFTN priority indicator is specified in Table 4-2 of Doc 9880, Part II [2],

4.5.2 CT502 – Convert an AFTN user message containing optional heading information

CT502	Convert an AFTN user message containing optional heading information
Test criteria	This test is successful, if the IUT converts an AFTN user message containing optional heading information (OHI) correctly into an AMHS message (IPM).
Scenario description	From the AMHS Test Tool send a sequence of AFTN user messages over the AFTN/CIDIN test interface to the IUT. The sequence of AFTN user messages shall address a remote AMHS user and consist of • a normal (non-SS) priority AFTN message containing (short) OHI text, • a normal (non-SS) priority AFTN message containing OHI filling the originator line, • an SS priority AFTN message containing (short) OHI text, • an SS priority AFTN message containing OHI filling the originator line. Check the IPMs transferred via the AMHS transfer port. Verify that the IUT has converted the messages correctly. Check envelopes and contents. In particular, verify the correct format of the ATS-message-header.
AMHS ref.: Doc 9880, Part II	4.4.2.1.6
Test class	Normal AMHS communications (N)

4.5.3 CT503 – Generate an AFTN service message of the type "Unknown Addressee Indicator"

CT503	**Generate an AFTN service message of the type "Unknown Addressee Indicator"**
Test criteria	This test is successful, if the IUT returns an AFTN service message of the type "Unknown Addressee Indicator", if the translation of addressee indicator fails.
Scenario description	From the AMHS Test Tool send an AFTN messages over the AFTN/CIDIN test interface to the IUT. The AFTN message shall contain an addressee indicator which can not be mapped by the IUT. Verify that the IUT does not convert the received AFTN message into an AMHS message (IPM), but returns an AFTN service message of the type "Unknown Addressee Indicator" over the AFTN/CIDIN test interface.
AMHS ref.: Doc 9880, Part II	4.5.4 (NDR conversion)
Test class	Normal AMHS communications (N)

4.5.4 CT504 – Incoming AFTN user message with unknown originator indicator

CT504	**Incoming AFTN message with unknown originator indicator**
Test criteria	This test is successful, if the IUT informs its control position, if during the conversion process the translation of the originator indicator fails.
Scenario description	From the AMHS Test Tool send an AFTN messages over the AFTN/CIDIN test interface to the IUT. The AFTN message shall contain an originator indicator which is unknown in the IUT. Verify that the IUT does not send any message via the CIDIN/AFTN or AMHS interface but informs its control position that the gateway is not able to translate the originator indicator.
AMHS ref.: Doc 9880, Part II	4.4.2.1.4.1
Test class	Erroneous AMHS parameters (E1)

4.5.5 CT505 – Convert a receipt notification

CT505	**Convert a receipt notification**
Test criteria	This test is successful, if the IUT converts a received IPN containing a receipt notification (RN) to an AFTN acknowledgement correctly.
Scenario description	From the AMHS Test Tool send an AFTN user message with priority "SS" via the AFTN/CIDIN test interface to the IUT. The message shall address an AMHS user and be converted by the IUT into AMHS format and sent as an IPM to the AMHS Test Tool via transfer port *trp1*. Upon receipt of the IPM the AMHS Test Tool returns a RN. Verify that the IUT converts the received RN correctly into an AFTN acknowledgement. In particular, verify that: • the *originator-name* is translated into the *Originator Indicator* of the AFTN acknowledgement,the *receipt-time* forms the *Filing Time* of the AFTN acknowledgement, logged elements of the previously handled *subject AFTN message* are used and inserted correctly into the AFTN acknowledgement.
AMHS ref.: Doc 9880, Part II	4.5.3 (RN conversion),
Test class	Normal AMHS communications (N)

4.5.6 CT506 – Incoming non-receipt notification

CT506	**Incoming non-receipt notification**
Test criteria	This test is successful, if the IUT reports to its control position and stores the message, if it receives an IPN containing a NRN addressed to an AFTN user.
Scenario description	From the AMHS Test Tool send an AFTN message with priority “SS” via the AFTN/CIDIN test interface to the IUT. The message shall address an AMHS user and be converted by the IUT into AMHS format and sent to the AMHS Test Tool via transfer port *trp1*. Upon receipt of the AMHS message the AMHS Test Tool returns a NRN. Verify that the IUT behaves as specified in the Doc 9880, Part II, section 4.5.1.2, i.e. • logs the error situation and reports to a control position, and • stores the message for appropriate processing at the control position.
AMHS ref.: Doc 9880, Part II	4.5.1.2 c) (processing of NRN)
Test class	Erroneous AMHS parameters (E1)

4.5.7 CT507 – Generate a NDR as a result of misrouted RN

CT507	**Generate a NDR as a result of misrouted RN**
Test criteria	This test is successful, if the IUT rejects a misrouted IPN containing a receipt notification (RN) and returns a NDR.
Scenario description	From the AMHS Test Tool send a RN to the IUT via transfer port trp1 addressed to an AFTN user. The RN contains a fictitious value for the subject-ipm (subject AFTN message) and is not related to any message that had previously passed the IUT. Verify that the IUT does not transfer any AFTN acknowledgement over the AFTN/CIDIN test interface to the AMHS Test Tool, but generates a NDR and sends it via the transfer port *trp1* to the AMHS Test Tool. Verify that the NDR contains the following elements as specified in the Doc 9880, Part II, section 4.5.3.1.1: • "unable-to-transfer" for the *non-delivery-reason-code*; • "invalid-arguments" for the *non-delivery-diagnostic-code*; and • "unable to convert RN to AFTN ACK service message due to misrouted RN" for the *supplementary-information*.
AMHS ref.: Doc 9880, Part II	4.5.3.1.1
Test class	MHS procedural errors (E2)

4.5.8 CT508 – Convert a non-delivery report (NDR)

CT508	**Convert a non-delivery report (NDR)**
Test criteria	This test is successful, if the IUT converts a received NDR with a *non-delivery-diagnostic-code* of the value “unrecognised-OR-name” to an AFTN service message (SVC) of the type “Unknown Addressee”.
Scenario description	From the AMHS Test Tool send an AFTN message via the AFTN/CIDIN test interface to the IUT. The message shall address an AMHS user and be converted by the IUT into AMHS format and sent to the AMHS Test Tool via transfer port *trp1*. The AMHS Test Tool shall return a NDR related to the received message and with a *non-delivery-diagnostic-code* of the value “unrecognised-OR-name”. Verify that the IUT converts the received NDR into an AFTN service message (SVC) and sends it over the AFTN/CIDIN test interface to the AMHS Test Tool. In particular, verify that: • the *actual-recipient-name* elements (provided with the *per-recipient-fields* in the Report Transfer Content) are converted into AFTN addresses which form the *unknown-addressee-indicators* in the text of the AFTN SVC,priority indicator, addressee indicator, origin and the first-address-line of the subject message are taken from log entries made for the handled subject message, and the filing time is generated correctly by the gateway component of the IUT. • the originator indicator of the service message is the AFTN Address of the AFTN Component of the AFTN/AMHS Gateway
AMHS ref.: Doc 9880, Part II	4.5.4 (NDR conversion), 4.5.4.2.6
Test class	Normal AMHS communications (N)

4.5.9 CT509 – NDR conversion process failures

CT509	NDR conversion process failures
Test criteria	This test is successful, if the IUT reports to its control position, whenever an error occurs in the NDR conversion process.
Scenario description	From the AMHS Test Tool send three AFTN messages via the CIDIN/AFTN interface to the IUT. The messages shall address an AMHS user and be converted by the IUT into AMHS format and sent to the AMHS Test Tool via transfer port *trp1*. The AMHS Test Tool shall return a NDR for each received message. • The 1st NDR shall contain a *non-delivery-diagnostic-code* different from "unrecognised-OR-name".The 2nd NDR shall contain an unknown address in the *actual-recipient-name* element. • The 3rd NDR shall refer to a fictitious subject message that did never pass the gateway before. Check the output of the IUT at the control position. Verify that for each NDR the IUT behaves as specified in the relevant sections of the Doc 9880, Part II, i.e. • logs the non-delivery situation and reports to a control position, and • stores the non-delivery report for appropriate processing at the control position.
AMHS ref.: Doc 9880, Part II	4.5.4.1.1, 4.5.4.1.3
Test class	Erroneous AMHS parameters (E1)

4.6 Naming and Addressing

4.6.1 CT601 – Symmetric address conversion from AMHS CAAS- and XF-addresses to AFTN addresses

CT601	**Symmetric address conversion from AMHS CAAS- and XF-addresses to AFTN addresses**
Test criteria	This test is successful, if the IUT when converting an AMHS message (IPM) to an AFTN message translates the originator and recipient addresses to the AFTN originator indicator and addressee indicators correctly. Conversion shall be correct for both types, i.e. CAAS and XF-addresses. *Note.- The test cases in which the address conversion AMHS-AFTN-AMHS leads to asymmetric results are covered in CT607.*
Scenario description	From the AMHS Test Tool send a sequence of ATS messages (IPMs) over AMHS transfer ports *trp1, trp2* and *trp3* to the IUT, addressing different AFTN users reachable via the AFTN/CIDIN port *cid1*. • The 1st ATS message shall be sent via MTA-1 with originator from AMHSLAND-1 addressing an AFTN user in AFTNLAND-1. Note that both PRMDs (AMHSLAND-1 and AFTNLAND-1) implement the CAAS with one single organisation-name value for all location indicators within the PRMD. • The 2nd ATS message shall be sent via MTA-2 with originator from AMHSLAND-2, AB-REGION1 addressing an AFTN user in AFTNLAND-2, BB-REGION1. Note that both PRMDs (AMHSLAND-2 and AFTNLAND-2) implement the CAAS with multiple organisation-name values for different sets of location indicators within the PRMD. • The 3rd ATS message shall be sent via MTA-2 with originator from AMHSLAND-2, AB-REGION2 addressing an AFTN user in AFTNLAND-2, BB-REGION2. • The 4th ATS message shall be sent via MTA-2 with originator from AMHSLAND-2, AB-REGION3 addressing an AFTN user in AFTNLAND-2, BB-REGION3. • The 5th ATS message shall be sent via MTA-3 with originator from AMHSLAND-3 addressing an AFTN user in AFTNLAND-3. Note that both PRMDs (AMHSLAND-3 and AFTNLAND-3) implement the XF addressing scheme. • The 6th ATS message shall be sent via MTA-1 with originator from AMHSLAND-1 addressing five AFTN users, one in AFTNLAND-1, three in AFTNLAND-2 (BB-REGION1, BB-REGION2 and BB-REGION3) and one in AFTNLAND-3. • The 7th ATS message shall be sent via MTA-2 with originator from AMHSLAND-2, AB-REGION1 addressing five AFTN users, one in AFTNLAND-1, three in AFTNLAND-2 (BB-

	REGION1, BB-REGION2 and BB-REGION3) and one in AFTNLAND-3. • The 8th ATS message shall be sent via MTA-2 with originator from AMHSLAND-2, AB-REGION2 addressing five AFTN users, one in AFTNLAND-1, three in AFTNLAND-2 (BB-REGION1, BB-REGION2 and BB-REGION3) and one in AFTNLAND-3. • The 9th ATS message shall be sent via MTA-2 with originator from AMHSLAND-2, AB-REGION3 addressing five AFTN users, one in AFTNLAND-1, three in AFTNLAND-2 (BB-REGION1, BB-REGION2 and BB-REGION3) and one in AFTNLAND-3. • The 10th ATS message shall be sent via MTA-3 with originator from AMHSLAND-3 addressing five AFTN users, one in AFTNLAND-1, three in AFTNLAND-2 (BB-REGION1, BB-REGION2 and BB-REGION3) and one in AFTNLAND-3. All messages shall have an IA5-text body part with ATS-message-header. The implicit-conversion-prohibited attribute in the MTE shall be set to "false". Originator and recipient addresses in the IPM heading shall be equal to those in the MTE or empty[17]. Check the messages received at the CIDIN/AFTN interface. Verify that the IUT was able to map all AMHS O/R addresses to AFTN addresses. Verify the correct AFTN originator indicator and addressee indicators in the received AFTN messages.
AMHS ref.: Doc 9880, Part II	2.5 (Naming and Addressing Principles) 4.5.2.2.6 (Generation of the AFTN originator indicator) 4.5.2.2.7 (Generation of the AFTN addressee indicator)
Test class	Normal AMHS communications (N)

[17] Originator and recipient addresses in the IPM heading may be empty. According to Doc 9880, Part II, 4.5.2.3 "Use of IPM elements" those addresses are discarded by the MTCU.

4.6.2 CT602 – Address conversion from AFTN addresses to AMHS CAAS- and XF-addresses

CT602	**Address conversion from AFTN addresses to AMHS CAAS- and XF-addresses**
Test criteria	This test is successful, if the IUT that converts an AFTN user message to AMHS translates the AFTN originator indicator and all addressee indicators into correct AMHS addresses, which may be either XF- or CAAS addresses.
Scenario description	From the AMHS Test Tool send a sequence of AFTN user messages over the AFTN/CIDIN port *cid1* to the IUT addressing different AMHS users reachable via the AMHS transfer ports *trp1, trp2* and *trp3*. • The 1st AFTN user message shall be sent with originator from AFTNLAND-1 addressing an AMHS user in AMHSLAND-1. Note that both PRMDs (AFTNLAND-1 and AMHSLAND-1) implement the CAAS with one single organisation-name value for all location indicators within the PRMD. • The 2nd AFTN user message shall be sent with originator from AFTNLAND-2, BB-REGION1 addressing an AMHS user in AMHSLAND-2, AB-REGION1. Note that both PRMDs (AFTNLAND-2 and AMHSLAND-2) implement the CAAS with multiple organisation-name values for different sets of location indicators within the PRMD. • The 3rd AFTN user message shall be sent with originator from AFTNLAND-2, BB-REGION2 addressing an AMHS user in AMHSLAND-2, AB-REGION2. • The 4th AFTN user message shall be sent with originator from AFTNLAND-2, BB-REGION3 addressing an AMHS user in AMHSLAND-2, AB-REGION3. • The 5th AFTN user message shall be sent with originator from AFTNLAND-3 addressing an AMHS user in AMHSLAND-3. Note that both PRMDs (AFTNLAND-3 and AMHSLAND-3) implement the XF addressing scheme. • The 6th AFTN user message shall be sent with originator from AFTNLAND-1 addressing five AMHS users, one in AMHSLAND-1, three in AMHSLAND-2 (AB-REGION1, AB-REGION2 and AB-REGION3) and one in AMHSLAND-3. • The 7th AFTN user message shall be sent with originator from AFTNLAND-2, BB-REGION1 addressing five AMHS users, one in AMHSLAND-1, three in AMHSLAND-2 (AB-REGION1, AB-REGION2 and AB-REGION3) and one in AMHSLAND-3. • The 8th AFTN user message shall be sent with originator from AFTNLAND-2, BB-REGION2 addressing five AMHS users, one in AMHSLAND-1, three in AMHSLAND-2 (AB-REGION1, AB-REGION2 and AB-REGION3) and one in AMHSLAND-3. • The 9th AFTN user message shall be sent with originator from

	AFTNLAND-2, BB-REGION3 addressing five AMHS users, one in AMHSLAND-1, three in AMHSLAND-2 (AB-REGION1, AB-REGION2 and AB-REGION3) and one in AMHSLAND-3. • The 10th AFTN user message shall be sent with originator from AFTNLAND-3 addressing five AMHS users, one in AMHSLAND-1, three in AMHSLAND-2 (AB-REGION1, AB-REGION2 and AB-REGION3) and one in AMHSLAND-3. Check the messages received at AMHS transfer ports *trp1, trp2* and *trp3*. Verify that the IUT was able to map all AFTN originator and addressee indicators to AMHS O/R addresses. Verify the correct AMHS O/R addresses in the originator and recipient fields of both MTE and IPM headings.
AMHS ref.: Doc 9880, Part II	2.5 (Naming and Addressing Principles) 4.4.2.1.4.1 (Translation of the AFTN originator indicator) 4.4.2.1.4.2 (Translation of the AFTN addressee indicator)
Test class	Normal AMHS communications (N)

4.6.3 CT603 – Reject an IPM with invalid recipient address (CAAS like)

CT603	**Reject an IPM with invalid recipient address (CAAS like)**
Test criteria	This test is successful, if the IUT generates a NDR, when it receives an ATS message (IPM) that contains a recipient address of type CAAS which can not be mapped to a valid AFTN addressee indicator.
Scenario description	From the AMHS Test Tool send a sequence of ATS messages (IPMs) over AMHS transfer port *trp1* to the IUT addressing an AFTN user in the PRMD "AFTNLAND-1" that implements the CAAS. All messages shall have a valid originator address and an erroneous recipient address in the MTE. Originator and recipient addresses in the IPM heading shall be equal to those in the MTE or empty[18]. • The 1st ATS message shall contain a recipient address with an invalid *common-name* attribute, that contains 9 letters, e.g. "BAAAFTABC". • The 2nd ATS message shall contain a recipient address with an invalid *common-name* attribute, that contains only 6 letters, e.g. "BAAAFT". • The 3rd ATS message shall contain a recipient address with a valid *organizational-unit-names* attribute "BAAA", but an empty *common-name* attribute. • The 4th ATS message shall contain a recipient address with a valid *common-name* attribute "BAAAFTAA", but an empty *organizational-unit-names* attribute. • The 5th ATS message shall contain a recipient address with a valid *common-name* attribute "BAAAFTAA", but an *organizational-unit-names* attribute that is different from the first 4 letters of the *common-name* attribute, e.g. "BAAX". • The 6th ATS message shall contain a recipient address with a valid *common-name* attribute "BAAAFTAA" and correct *organizational-unit-names* attribute "BAAA", but an empty *organization-name* attribute. Verify that for each message a NDR is generated by the IUT with the following elements: • "unable-to-transfer" for the *non-delivery-reason-code*, and • "unrecognised-OR-name" for the non-delivery-diagnostic-code.
AMHS ref.: Doc 9880, Part II	4.5.2.2.6 (Generation of the AFTN originator indicator) 4.5.2.2.7 (Generation of the AFTN addressee indicator)
Test class	Erroneous AMHS parameters (E1)

[18] Originator and recipient addresses in the IPM heading may be empty. According to Doc 9880, Part II, 4.5.2.3 "Use of IPM elements" those addresses are discarded by the MTCU.

4.6.4 CT604 – Reject an IPM with invalid recipient address (XF like)

CT604	**Reject an IPM with invalid recipient address (XF like)**
Test criteria	This test is successful, if the IUT generates a NDR, when it receives an ATS message (IPM) that contains a recipient address of type XF which can not be mapped to a valid AFTN addressee indicator.
Scenario description	From the AMHS Test Tool send a sequence of ATS messages (IPMs) over AMHS transfer port *trp1* to the IUT addressing an AFTN user in the PRMD "AFTNLAND-3" that implements the XF addressing scheme. All messages shall have a valid originator address and an erroneous recipient address in the MTE. Originator and recipient addresses in the IPM heading shall be equal to those in the MTE or empty[19]. • The 1st ATS message shall contain a recipient address with the value "AFTN" in the *organization-name* attribute, but an invalid *organizational-unit-names* attribute, e.g. value "BCAAFTABC". • The 2nd ATS message shall contain a recipient address with the value "AFTN" in the *organization-name* attribute, but an invalid *organizational-unit-names* attribute, e.g. value "BCAAFT". • The 3rd ATS message shall contain a recipient address with the value "AFTN" in the *organization-name* attribute, but an empty *organizational-unit-names* attribute. • The 4th ATS message shall contain an originator address with an empty *organization-name* attribute and a valid *organizational-unit-names* attribute, e.g. value "BCAAFTAA". • The 5th ATS message shall contain an originator address with an invalid organization-name attribute, e.g. "ATFM" and a valid organizational-unit-names attribute, e.g. value "BCAAFTAA". Verify that for each message a NDR is generated by the IUT with the following elements: • "unable-to-transfer" for the *non-delivery-reason-code*, and • "unrecognised-OR-name" for the *non-delivery-diagnostic-code*.
AMHS ref.: Doc 9880, Part II	4.5.2.2.6 (Generation of the AFTN originator indicator) 4.5.2.2.7 (Generation of the AFTN addressee indicator)
Test class	Erroneous AMHS parameters (E1)

[19] Originator and recipient addresses in the IPM heading may be empty. According to Doc 9880, Part II, 4.5.2.3 "Use of IPM elements" those addresses are discarded by the MTCU.

4.6.5 CT605 – Reject an IPM with invalid originator address (CAAS like)

CT605	**Reject an IPM with invalid originator address (CAAS like)**
Test criteria	This test is successful, if the IUT generates a NDR, when it receives an ATS message (IPM) that contains an originator address of type CAAS which can not be mapped to a valid AFTN originator indicator.
Scenario description	From the AMHS Test Tool send a sequence of ATS messages (IPMs) over AMHS transfer port *trp1* to the IUT addressing an AFTN user reachable via the AFTN/CIDIN port *cid1*. All messages shall be originated from the PRMD "AMHSLAND-1" which implements the CAAS. They shall have a valid recipient address for the PRMD "AFTNLAND-1", but an erroneous originator address in the MTE. Originator and recipient addresses in the IPM heading shall be equal to those in the MTE or empty[20]. • The 1st ATS message shall contain an originator address with an invalid *common-name* attribute, e.g. "AAAAMHABC". • The 2nd ATS message shall contain an originator address with an invalid *common-name* attribute that contains only 6 letters, e.g. "AAAAMH". • The 3rd ATS message shall contain an originator address with a valid *organizational-unit-names* attribute "AAAA", but an empty *common-name* attribute. • The 4th ATS message shall contain an originator address with a valid *common-name* attribute "AAAAMHAA", but an empty *organizational-unit-names* attribute. • The 5th ATS message shall contain an originator address with a valid *common-name* attribute "AAAAMHAA", but an *organizational-unit-names* attribute that is different from the first 4 letters of the *common-name* attribute, e.g. "AAAX". • The 6th ATS message shall contain an originator address with a valid *common-name* attribute "AAAAMHAA" and correct *organizational-unit-names* attribute "AAAA", but an empty *organization-name* attribute. Verify that for each message a NDR is generated by the IUT with the following elements: • "unable-to-transfer" for the *non-delivery-reason-code*, • "invalid-arguments" for the *non-delivery-diagnostic-code*, and • "unable to convert to AFTN due to unrecognized originator O/R address" for the *supplementary-information*.

[20] Originator and recipient addresses in the IPM heading may be empty. According to Doc 9880, Part II, 4.5.2.3 "Use of IPM elements" those addresses are discarded by the MTCU.

AMHS ref.: Doc 9880, Part II	4.5.2.2.6 (Generation of the AFTN originator indicator) 4.5.2.2.7 (Generation of the AFTN addressee indicator)
Test class	Erroneous AMHS parameters (E1)

4.6.6 CT606 – Reject an IPM with invalid originator address (XF like)

CT606	**Reject an IPM with invalid originator address (XF like)**
Test criteria	This test is successful, if the IUT generates a NDR, when it receives an ATS message (IPM) that contains an originator address of type XF which can not be mapped to a valid AFTN originator indicator.
Scenario description	From the AMHS Test Tool send a sequence of ATS messages (IPMs) over AMHS transfer port *trp3* to the IUT addressing an AFTN user reachable via the AFTN/CIDIN port *cid1*. All messages shall be originated from the PRMD "AMHSLAND-3" which implements the XF addressing scheme. They shall have a valid recipient address for the PRMD "AFTNLAND-3", but an erroneous originator address in the MTE. Originator and recipient addresses in the IPM heading shall be equal to those in the MTE or empty[21]. • The 1st ATS message shall contain an originator address with the value "AFTN" in the *organization-name* attribute, but an invalid *organizational-unit-names* attribute, e.g. value "ACCCMHABC". • The 2nd ATS message shall contain an originator address with the value "AFTN" in the *organization-name* attribute, but an invalid *organizational-unit-names* attribute, e.g. value "ACCCMH". • The 3rd ATS message shall contain an originator address with the value "AFTN" in the *organization-name* attribute, but an empty *organizational-unit-names* attribute. • The 4th ATS message shall contain an originator address with an empty *organization-name* attribute and a valid *organizational-unit-names* attribute, e.g. value "ACCCMHAA". • The 5th ATS message shall contain an originator address with an invalid *organization-name* attribute, e.g. "UNKNOWN" and a valid *organizational-unit-names* attribute, e.g. value "ACCCMHAA".
AMHS ref.: Doc 9880, Part II	4.5.2.2.6 (Generation of the AFTN originator indicator) 4.5.2.2.7 (Generation of the AFTN addressee indicator)
Test class	Erroneous AMHS parameters (E1)

[21] Originator and recipient addresses in the IPM heading may be empty. According to Doc 9880, Part II,4.5.2.3 "Use of IPM elements" those addresses are discarded by the MTCU.

4.6.7 CT607 – Asymmetric address conversion from AMHS CAAS- and XF-recipient addresses to AFTN addresses

CT607	**Asymmetric address conversion from AMHS CAAS- and XF-recipient addresses to AFTN addresses**
Test criteria	This test is successful, if the IUT when converting an AMHS message (IPM) to an AFTN message translates the originator and recipient addresses to the AFTN originator indicator and addressee indicators although the re-conversions of the AFTN addressee indicators lead to O/R addresses different from the original recipient O/R addresses (asymmetric). The asymmetric recipient address conversion shall be logged and reported to the Control Position.
Scenario description	From the AMHS Test Tool send a sequence of ATS messages (IPMs) over AMHS transfer port *trp1* to the IUT, addressing different AFTN users reachable via the AFTN/CIDIN port *cid1*. • The 1st ATS message shall be sent via MTA-1 with correct originator from AMHSLAND-1 containing CAAS and XF recipient addresses which are translated into AFTN addresses of which the retranslations do not deliver the same AMHS addresses[22]: (1) /C=XX/ADMD=ICAO/PRMD=AFTNLAND-1 /O=BA-REGION/OU1=BBAA/CN=BBAAFTAA, (2) /C=XX/ADMD=ICAO/PRMD=AFTNLAND-2 /O=AFTN/OU1=BCAAFTAA. • The 2nd ATS message shall be sent via MTA-1 with correct originator from AMHSLAND-1 containing a CAAS recipient address with a PRMD value of an MD which has implemented the XF addressing scheme and a valid XF recipient address with a PRMD value of an MD which has implemented the CAAS addressing scheme: (3) /C=XX/ADMD=ICAO/PRMD=AFTNLAND-3 /O=AFTN/OU1=BCAA/CN=BCAAFTAA, (4) /C=XX/ADMD=ICAO/PRMD=AFTNLAND-1 /O=AFTN/OU1=BAAAFTAA. All messages shall have an IA5-text body part with ATS-message-header. The implicit-conversion-prohibited attribute in the MTE shall be set to “false”. Originator and recipient addresses in the IPM heading shall be equal to those in the MTE or empty[23]. Check the messages received at the CIDIN/AFTN interface. Verify that the IUT was able to convert all AMHS O/R addresses to AFTN addresses. Verify the correct AFTN originator indicator and

[22] The AMHS addresses are listed in Table 10.

[23] Originator and recipient addresses in the IPM heading may be empty. According to Doc 9880, Part II, 4.5.2.3 “Use of IPM elements” those addresses are discarded by the MTCU.

	addressee indicator in the received AFTN messages. Check that conversion asymmetries of the recipient addresses are logged and reported to the Control Position.
AMHS ref.: Doc 9880, Part II	2.5 (Naming and Addressing Principles) 4.5.2.2.6 (Generation of the AFTN originator indicator) 4.5.2.2.7 (Generation of the AFTN addressee indicator)
Test class	Normal AMHS communications (N)

4.6.8 CT608 – Asymmetric address conversion from AMHS CAAS- and XF- originator addresses to AFTN addresses

CT608	**Asymmetric address conversion from AMHS CAAS- and XF-originator addresses to AFTN addresses**
Test criteria	This test is successful, if the IUT, when converting an AMHS message (IPM) to an AFTN message, translates the originator and recipient addresses to the AFTN originator indicator and addressee indicators, although the re-conversion of the AFTN originator indicator leads to an originator O/R address different from the original O/R address (asymmetric). The asymmetric originator address conversion shall be logged and reported to the Control Position.
Scenario description	From the AMHS Test Tool send a sequence of ATS messages (IPMs) over AMHS transfer ports *trp1* and *trp3* to the IUT, addressing different AFTN users reachable via the AFTN/CIDIN port *cid1*. • The 1st ATS message shall be sent via MTA-1 with a CAAS originator address which is translated into an AFTN address of which the retranslation does not deliver the same AMHS address[24]: (5) /C=XX/ADMD=ICAO/PRMD=AMHSLAND-1 /O=AA-REGION/OU1=ABAA/CN=ABAAMHAA The recipient shall be an AFTN user in AFTNLAND-1. • The 2nd ATS message shall be sent via MTA-1 with a XF originator address which is translated into an AFTN address of which the retranslation does not deliver the same AMHS address: (6) /C=XX/ADMD=ICAO/PRMD=AMHSLAND-1 /O=AFTN/OU1=ACCCMHAA The recipient shall be an AFTN user in AFTNLAND-1. • The 3rd ATS message shall be sent via MTA-3 with a CAAS originator address with a PRMD value of an MD which has implemented the XF addressing scheme: (7) /C=XX/ADMD=ICAO/PRMD=AMHSLAND-3 /O=AFTN/OU1=ACCC/CN=ACCCMHAA The recipient shall be an AFTN user in AFTNLAND-1. • The 4th ATS message shall be sent via MTA-1 with a XF originator address with a PRMD value of an MD which has implemented the CAAS addressing scheme: (8) /C=XX/ADMD=ICAO/PRMD=AMHSLAND-1 /O=AFTN/OU1=AAAAMHAA The recipient shall be an AFTN user in AFTNLAND-1. All messages shall have an IA5-text body part with ATS-message-header.

[24] Originator and recipient addresses in the IPM heading may be empty. According to Doc 9880, Part II, 4.5.2.3 "Use of IPM elements" those addresses are discarded by the MTCU.

	The implicit-conversion-prohibited attribute in the MTE shall be set to "false". Originator and recipient addresses in the IPM heading shall be equal to those in the MTE or empty. Check the messages received at the CIDIN/AFTN interface. Verify that the IUT was able to convert all AMHS O/R addresses[25] to AFTN addresses. Verify the correct AFTN originator indicator and addressee indicator in the received AFTN messages. Check that the conversion asymmetries of the originator addresses are logged and reported to the Control Position.
AMHS ref.: Doc 9880, Part II	2.5 (Naming and Addressing Principles) 4.5.2.2.6 (Generation of the AFTN originator indicator) 4.5.2.2.7 (Generation of the AFTN addressee indicator)
Test class	Normal AMHS communications (N)

[25] The AMHS addresses are listed in Table 10.

4.7 Transfer, delivery and handling of Non-Delivery Reports (NDR)

4.7.1 CT701 – Transfer a non-delivery report (NDR)

CT701	**Transfer a non-delivery report (NDR)**
Test criteria	This test is successful, if the IUT transfers (forwards) non-delivery reports containing the standardized reason and diagnostic codes correctly.
Scenario description	From the AMHS Test Tool send a set of non-delivery reports to the IUT transfer port *trp1* to be forwarded to another domain. The set of NDRs shall cover the full scope of reason and diagnostic codes standardized in ISO/IEC 10021-4 (ITU-T Rec. X.411), section 8.3.1.2.1.11 and section 8.3.1.2.1.12, respectively (see Table 16 below). The report transfer envelope shall contain a remote recipient address (Report Destination) reachable via transfer port *trp2*. The reports may contain fictitious values for those fields which are normally related to a subject message, like subject-MTS-identifier and encoded-information types and originally intended recipients. Monitor the outcome of IUT transfer port *trp2*. Verify that: • all reports are routed correctly via transfer port *trp2*, and • the reason and diagnostic codes of the forwarded report are identical to those contained in the original report.
AMHS ref.: Doc 9880, Part II	
Test class	Normal AMHS communications (N)

AMHS Report ID	*number of Per-Recipient-Fields*	reason code	diagnostic codes (range)
CT701M01	*16*	0	0 - 15
CT701M02	*31*	0	0 - 30
CT701M03	*31*	1	0 - 30
CT701M04	*5*	1	46 - 50
CT701M05	*3*	2	8 - 10
CT701M06	*7*	2	19 - 25
CT701M07	*1*	3	31
CT701M08	*14*	4	32 - 45
CT701M09	*1*	5	not used
CT701M10	*1*	6	not used

AMHS Report ID	*number of Per-Recipient-Fields*	reason code	diagnostic codes (range)
CT701M11	*1*	7	not used
CT701M12	*28*	8	51 - 78

Table 16: AMHS non-delivery-reason-codes and non-delivery-diagnostic-codes used in test messages of CT701 – CT703[26]

Note 1.- The non-delivery-diagnostic-code is an optional element and, for example, not contained in test messages CT701M09, CT701M10 and CT701M11.

Note 2.- Depending on the level of service implemented by the IUT the range of valid non-delivery-reason-codes as well as non-delivery-diagnostic-codes could be different:

Level of Service	ISO/IEC Version	Reason Code Range	Diagnostic Code Range
Basic	ISO/IEC 10021-4:1990	0 - 7	1 - 49
Extended	ISO/IEC 10021-4:1999	0 - 8	1 - 78

[26] Every standardized reason code (0 ... 8) and every standardized diagnostic code (0 ... 78) is contained at least once in the test messages.

4.7.2 CT702 – Deliver a non-delivery report (NDR) to an AMHS user

CT702	**Deliver a non-delivery report (NDR) to an AMHS user**
Test criteria	This test is successful, if the IUT delivers non-delivery reports containing the standardized reason and diagnostic codes to an AMHS user correctly.
Scenario description	From the AMHS Test Tool send a set of non-delivery reports to the IUT transfer port *trp1* to be forwarded to a directly attached AMHS user. The set of NDRs shall cover the full scope of reason and diagnostic codes standardized in ISO/IEC 10021-4 (ITU-T Rec. X.411), section 8.3.1.2.1.11 and section 8.3.1.2.1.12, respectively (see Table 16). The report transfer envelope shall contain the recipient address of an AMHS user connected to the IUT. The reports may contain fictitious values for those fields which are normally related to a subject message, like subject-MTS-identifier and encoded-information types and originally intended recipients. Monitor the reports received at the AMHS user agent. Verify that: • all reports are delivered to the AMHS user agent, and • the reason and diagnostic codes of the delivered reports are identical to those contained in the reports sent from the AMHS test tool.
AMHS ref.: Doc 9880, Part II	
Test class	Normal AMHS communications (N)

Note.- Note 2 of CT701 applies also to CT702.

4.7.3 CT703 – Handling of received non-delivery report (NDR) in the AFTN/AMHS gateway

CT703	**Handling of received non-delivery report (NDR) in the AFTN/AMHS gateway**
Test criteria	This test is successful, if the IUT upon reception by the MTCU of an AMHS non-delivery report logs the error situation and reports to the control position, if the report does not refer to any previously generated subject message or contains a *non-delivery-diagnostic-code* value other than “unrecognised-OR-name(0)”.
Scenario description	From the AMHS Test Tool send a set of non-delivery reports to the IUT addressed to an AFTN user reachable via the AFTN/AMHS gateway. The set of NDRs shall cover the full scope of reason and diagnostic codes standardized in ISO/IEC 10021-4 (ITU-T Rec. X.411), section 8.3.1.2.1.11 and section 8.3.1.2.1.12, respectively (see Table 16). The report transfer envelope shall contain the recipient address of an AFTN user reachable via the IUT’s AFTN/AMHS gateway. The reports relate to fictitious subject messages that have never been generated by the MTCU. Monitor the events at the Control Position. Verify that the IUT logs the error situation and reports to the control position for every received NDR.
AMHS ref.: Doc 9880, Part II	
Test class	Normal AMHS communications (N)

Note.- Note 2 of CT701 applies also to CT703.

4.7.4 CT704 – Transfer a NDR containing non-standard reason or diagnostic codes

CT704	**Transfer a NDR containing non-standard reason or diagnostic codes**
Test criteria	This test is successful, if the IUT transfers non-delivery reports containing reason and diagnostic codes which are syntactically correct, but different from those defined in section 8.3.1.2.1.11 and section 8.3.1.2.1.12 of ISO/IEC 10021-4 (ITU-T Rec. X.411).
Scenario description	From the AMHS Test Tool send several NDRs to the IUT transfer port *trp1* to be forwarded to a recipient address reachable via transfer port *trp2*. The NDRs may contain fictitious values for those fields which are normally related to a subject message. Six NDRs shall be sent containing the following reason and diagnostic codes: • CT704M01 contains “9” for the *non-delivery-reason-code* and “invalid-arguments” for the *non-delivery-diagnostic-code*. • CT704M02 contains “255” for the *non-delivery-reason-code* and “invalid-arguments” for the *non-delivery-diagnostic-code*. • CT704M03 contains “32767” for the *non-delivery-reason-code* and “invalid-arguments” for the *non-delivery-diagnostic-code*. • CT704M04 contains “unable-to-transfer” for the *non-delivery-reason-code* and “79” for the *non-delivery-diagnostic-code*. • CT704M05 contains “unable-to-transfer” for the *non-delivery-reason-code* and “255” for the *non-delivery-diagnostic-code*. • CT704M06 contains “unable-to-transfer” for the *non-delivery-reason-code* and “32767” for the *non-delivery-diagnostic-code*. Monitor the outcome of IUT transfer port *trp2*. Verify that: • all reports are routed correctly via transfer port *trp2*, and • the reason and diagnostic codes of the forwarded report are identical to those contained in the original report.
AMHS ref.: Doc 9880, Part II	
Test class	Erroneous AMHS parameters (E1)

4.7.5 CT705 – Deliver a NDR containing non-standard reason or diagnostic codes to an AMHS user agent

CT705	**Deliver a NDR containing non-standard reason or diagnostic codes to an AMHS user agent**
Test criteria	This test is successful, if the IUT delivers non-delivery reports containing reason and diagnostic codes which are syntactically correct, but different from those defined in section 8.3.1.2.1.11 and section 8.3.1.2.1.12 of ISO/IEC 10021-4 (ITU-T Rec. X.411) to an AMHS user agent.
Scenario description	From the AMHS Test Tool send several NDRs to the IUT transfer port *trp1* to be forwarded to a directly attached AMHS user. The NDRs may contain fictitious values for those fields which are normally related to a subject message. Six NDRs shall be sent containing the following reason and diagnostic codes: • CT705M01 contains “9” for the *non-delivery-reason-code* and “invalid-arguments” for the *non-delivery-diagnostic-code*. • CT705M02 contains “255” for the *non-delivery-reason-code* and “invalid-arguments” for the *non-delivery-diagnostic-code*. • CT705M03 contains “32767” for the *non-delivery-reason-code* and “invalid-arguments” for the *non-delivery-diagnostic-code*. • CT705M04 contains “unable-to-transfer” for the *non-delivery-reason-code* and “79” for the *non-delivery-diagnostic-code*. • CT705M05 contains “unable-to-transfer” for the *non-delivery-reason-code* and “255” for the *non-delivery-diagnostic-code*. • CT705M06 contains “unable-to-transfer” for the *non-delivery-reason-code* and “32767” for the *non-delivery-diagnostic-code*. Verify that all NDRs are delivered to the AMHS user agent. Check the contained reason and diagnostic codes (if any). Verify that no misleading information is presented to the AMHS user.
AMHS ref.: Doc 9880, Part II	
Test class	Erroneous AMHS parameters (E1)

4.7.6 CT706 – Handling of NDR containing non-standard reason or diagnostic codes in the AFTN/AMHS gateway

CT706	**Handling of NDR containing non-standard reason or diagnostic codes in the AFTN/AMHS gateway**
Test criteria	This test is successful, if the IUT upon reception by the MTCU of an AMHS non-delivery report logs the error situation and reports to the control position, if the NDR contains non-standard reason or diagnostic codes.
Scenario description	From the AMHS Test Tool send several AMHS non-delivery reports to the IUT addressed to an AFTN user reachable via the AFTN/AMHS gateway. The NDRs may contain fictitious values for those fields which are normally related to a subject message. Six NDRs shall be sent containing the following reason and diagnostic codes: • CT706M01 contains “9” for the *non-delivery-reason-code* and “invalid-arguments” for the *non-delivery-diagnostic-code*. • CT706M02 contains “255” for the *non-delivery-reason-code* and “invalid-arguments” for the *non-delivery-diagnostic-code*. • CT706M03 contains “32767” for the *non-delivery-reason-code* and “invalid-arguments” for the *non-delivery-diagnostic-code*. • CT706M04 contains “unable-to-transfer” for the *non-delivery-reason-code* and “79” for the *non-delivery-diagnostic-code*. • CT706M05 contains “unable-to-transfer” for the *non-delivery-reason-code* and “255” for the *non-delivery-diagnostic-code*. • CT706M06 contains “unable-to-transfer” for the *non-delivery-reason-code* and “32767” for the *non-delivery-diagnostic-code*. Monitor the events at the Control Position. Verify that the IUT logs the error situation and reports to the control position for every received NDR.
AMHS ref.: Doc 9880, Part II	
Test class	Erroneous AMHS parameters (E1)

END of Appendix D