Implementation Manual for IRIDIUM Satellite Communications Service

Draft

v1.0

February 15, 2006

1. Document Change Control

Date/Version	Change
2/15/06 v0.1	Draft Document for Working Group Comment

2. Table of Contents

1. DOCUMENT CHANGE CONTROL 2

2. TABLE OF CONTENTS 3

3. INTRODUCTION 5

3.1 OBJECTIVE AND SCOPE 5
3.2 ACRONYMS 6
3.3 DEFINITIONS 9
3.4 SPECIFICATIONS AND STANDARDS 10

4. THEORY OF OPERATIONS-ARCHITECTURE 12

4.1 SPACE SEGMENT 12
4.2 SYSTEM CONTROL SEGMENT 15
4.3 GATEWAY SEGMENT 17
4.3.1 SSS – Siemens D900 18
4.3.1.1 Home Location Register (HLR) 19
4.3.1.2 Visitor Location Register (VLR) 19
4.3.1.3 Equipment Identity Register (EIR) 19
4.3.1.4 Authentication Center (AUC) 19
4.3.2 Earth Terminals (ET) 19
4.3.3 ETC Transmission Subsystem (ETS) 19
4.3.4 ETC Communications Subsystem (ECS) 19
4.3.5 Message Origination Center (MOC) 20
4.3.6 Notification Center (NC) 20
4.3.7 Web and Email messaging server (WEMS) 20
4.3.8 Router UDI Customer Service (RUDICS) 20
4.3.9 ETC Short Burst Data Subsystem (ESS) 20
4.4 SUBSCRIBER SEGMENT 20
4.4.1 Transmission Characteristics 24
4.4.2 Vocoder 24
4.4.3 IRIDIUM Identifiers 24

5. SERVICES SUPPORTED 26

5.1 SECURITY 27
5.1.1 Voice Service 28
5.1.1.1 Acquisition 29
5.1.1.2 Access 31
5.1.1.3 Call Establishment 33
5.1.1.4 Call Maintenance 34
5.1.1.5 Call Release 36
5.1.1.6 ISU to PSTN Calling 36
5.1.1.7 ISU to ISU Calling 37
5.1.1.8 PSTN to ISU Calling (MTC) 38
5.1.2 Data Link 39

5.1.2.1 SBD 39
5.1.2.2 RUDICS 41

6. OPERATIONS 45

6.1 PERFORMANCE 45
6.2 SYSTEM AVAILABILITY (BASED ON MASPS, DO-270) 45
6.2.1 Derivation and Calculations 45
6.2.2 KPI's 45
6.3 SYSTEM OUTAGES AND MAINTENANCE 46
6.3.1 Planned Outages 46
6.4 UNPLANNED OUTAGES 46
6.5 NOTIFICATIONS 47
6.6 REPORTING AN OUTAGE 50
6.7 TROUBLE TICKET MANAGEMENT PROCESS 50
6.7.1.1 Back-Up Handling 51
6.7.2 Unscheduled Maintenance 51
6.7.2.1 Detection Process 51

7. AVIONICS 53

7.1 REQUIREMENTS DEFINITION 53
7.2 AIRCRAFT INSTALLATION GUIDELINES 54
7.3 AIRCRAFT ANTENNA CHARACTERISTICS 54
7.4 QUALIFICATION-NETWORK 54
7.4.1 Technical capabilities 55
7.4.2 Physical Assets 55
7.4.3 Financial Viability 55
7.4.4 Customer Care Capabilities 56
7.4.5 Product Support Infrastructure 56

8. IRIDIUM GROUND BASED SERVICES 57

9. PROCESS FOR IMPLEMENTING FUTURE SERVICES 58

10. APPENDICES TO INCLUDE INTEGRATION CONTROL DOCUMENTS 59

3. Introduction

3.1 Objective and Scope

The objective of this manual is to provide information and guidance related to the implementation of the IRIDIUM Satellite communication system for aviation safety service.

3.2 Acronyms

AI	Access Identifier
AoC	Advice of Charge
API	Application Programming Interface
ATC	AT Command
AUC	Authentication Center
BAIC	Barring of All Incoming Calls
BAOC	Barring of All Outgoing Calls
BCD	Binary Coded Decimal
BER	Billing Event Record
CC	Country Code
CDR	Call Detail Record
CF	Control Facility
CFB	Call Forwarding Mobile Subscriber Busy
CFNRc	Call Forwarding on Mobile Subscriber Not Reachable
CFNRy	Call Forwarding on Mobile Subscriber Not Ready
CFU	Call Forwarding Unconditional
CIR	Call Image Record
CPLD	Call Processing Location Determination
CUG	Closed User Group
CW	Call Waiting
DMS	Directed Messaging Service
DN	Directory Network
DSC	Delivery Short Code
DTE	Data Terminal Equipment
DTMS	Dual Tone Multi Frequency
ECC	Enhanced Call Completion
ECS	Earth Terminal Controller - Communication Subsystem
EIR	Equipment Identity Register
ERM	Event Response Manager
ESS	ETC SBD Subsystem
ET	Earth Terminal
ETC	Earth Terminal Controller
ETS	Earth Terminal Controller- Transmission Subsystem
FA	Field Application
FAC	Final Assembly Code
GBS	Gateway Business System
GMS	Gateway Management System
GPE	Geopolitical Entity
GPS	Global Positioning System

GSM	Global System for Mobile Communication also Groupe Special Mobile
GSS	Gateway SBD Subsystem
GTAC	Gateway Technical Assistance Center
GW	Gateway Segment
HCDR	"Hot" Call Detail Record
HLR	Home Location Register
HLRID	Home Location Register Identification
HOLD	Call Hold
IARSTAT	Inter-Administrative Revenue Accounting Statistics
IBS	IRIDIUM Business System
IBSS	IRIDIUM Business Support System
IGAP	IRIDIUM Gateway Application Parts
IIC	IRIDIUM Interface Center
IMEI	International Mobile Equipment Identity
IMSI	International Mobile Subscriber Identification
INSI	IRIDIUM Network Subscriber Identifier
ISC	International Switching Center
ISDN	Integrated Services Digital Network
ISU	IRIDIUM Subscriber Unit
ISUP	ISDN User Parts
ITM	IRIDIUM Transport Mode
ITU	International Telecommunications Union
IWF	Interworking Functions
LAC	Local Area Code
LAI	Local Area Identification
LAPD	Link Access Protocol Data
LBT	L-band Transceiver
LCF	Launch Control Facility
MCC	Mobile Country Code
MCF	Master Control Facility
MDA	Message Delivery Area
MDR	Message Delivery Request
MFCR2	Multi-Frequency Carrier R2
MIME	Multipurpose Internet Mail Extensions
MMA	Main Mission Antenna
MML	Man Machine Language
MNC	Mobile Network Code
MO	Mobile Originated
MOC	Message Origination Controller
MOMSN	Mobile Originated Message Sequence Number

MPTY	Multi-Party Service
MSC/VLR ID	LAI code field name for D900-SSS identification
MSN	Message Sequence Number
MSRN	Mobile Subscriber Roaming Number
MT	Mobile Terminated
MTC	Message Termination Controller
MTD	Message Termination Device
MTMSN	Mobile Terminated Message Sequence Number
NC	Notification Center
NDC	National Destination Code
NE	Network Element
NM	Network Manager
NOC	Network Operations Center
OMC-G	Operational Support Network- Gateway
OMC-R	Operational Support Network- Radio
OMT	Operation and Maintenance Terminal
OS	Orbit Services
OSN	Operational Support Network
OTA	Over The Air
PIN	Personal Identification Number
PLMN	Public Land Mobile Network
PSDN	Public Switched Data Network
PSTN	Public Switched Telephone Network
RA	Radio Astronomy
RAND	Random Number
SBD	Short Burst Data
SC	Satellite Control
SCA	Service Control Area
SCC	SATCOM Control Center
SCD	System Control Data
SCS	System Control Segment
SEF	SATCOM Engineering Facility
SEP	SBD ETC Processor
SFU	FAX Store-and-Forward Unit
SIM	Subscriber Information Module
SMS	Short Messaging Service
SNR	Serial Number
SPNet	IRIDIUM's proprietary provisioning tool for contracted business partners
SPP	SBD Post Processor
SRES	Signal Response

SRM	System Resource Manager
SSD	SBD Subscriber Device
SSS (1)	Subscriber Service Session
SSS (2)	Switching Subsystem
SV	Space Vehicle
TAC	Type Approved Code
TMSI	Temporary Mobile Subscriber Identification
TNSI	Temporary Network Subscriber Identifier
TTAC	Telemetry Tracking and Control/Command
UTC	Coordinated Universal Time
VLR	Visitor Location Register
VA	Vendor Application
VM	Voice Messaging
WAN	Wide Area Network

3.3 Definitions

Access	The process of determining if service should be granted to an ISU based on geopolitical entity association and geographical location of the ISU
Acquisition	The first step of establishing a communications link between an ISU and an SV
Constellation	Seventy-two SVs orbiting in 6 polar planes with 11 Mission SVs and 1 spare SV in each plane
Cut-through	Establishing a bearer end-to-end speech path through the IRIDIUM Constellation
FAX Store-	A Service that allows an IRIDIUM subscriber to send and receive and-Forward FAX to and from other IRIDIUM subscribers of PSTN users
Geolocation	Earth reference geographical coordinates of the location of an ISU
Inter-SV handoff	ISU initiated transfer from one antenna beam to another from a different SV
Intra beam handoff	Transfer of ISU by SV from the current traffic channel to a new traffic channel on the same SV
Intra-SV handoff	ISU initiated transfer from one antenna beam pattern to another from the same SV

IRIDIUM System	A satellite-based, digital, wireless, personal communication network
Mobile Originated Buffer	This is the buffer in the ISU in which an SBD message to be sent from the ISU to the ESS will be stored.
Mobile Terminated Buffer	This is the buffer in the ISU in which an SBD message sent from the ESS to the ISU will be stored.
SPNet	IRIDIUM's proprietary provisioning tool for contracted business partners
Terminating Gateway	The Gateway assigned to perform call termination and further call processing for a user approved access to receive a call from the IRIDIUM network
Triples	A triple consists of three numbers that are generated in the GSC using various mathematical algoriths. Six triples are generated for each subscriber, five are sent to the VLR where the subscriber is roaming and one is stored in the subscriber's home GSC.

3.4 Specifications and Standards

ARINC 622	ATS Data Link Applications Over ACARS Air-Ground Network
ARINC 623	Character-Oriented Air Traffic Service (ATS) Applications
ARINC 761	Second Generation Aviation Satellite Communication System, Aircraft Installation Provisions, specifications for additional requirements
ITU-R M.1343	Essential Technical Requirements of Mobile Earth Stations for Global Non-Geostationary Mobile-Satellite Service Systems in the bands 1-3 GHz
RTCA DO-160	Environmental Conditions and Test Procedures for Airborne Equipment
RTCA DO-215A	Guidance on Aeronautical Mobile Satellite Service (AMSS) End-to-End System Performance
RTCA DO-231	Design Guidelines and Recommended Standards for the Implementation and Use of AMS(R)S Voice Services in a Data Link Environment
RTCA DO-262	Minimum Operational Performance Standards for Avionics Supporting Next Generation Satellite Systems (NGSS), for minimum performance standard of NGSS AMS(R)S
RTCA DO-270	Minimum Aviation System Performance Standards (MASPS) for the Aeronautical Mobile-Satellite (R) Service (AMS(R)S) as Used in Aeronautical Data Links, for requirement and specification for the data link

ETSI EN 300 831	Electromagnetic compatibility and Radio spectrum Matters (ERM); Electromagnetic Compatibility (EMC) for Mobile Earth Stations (MES) used within Satellite Personal Communications Networks (S-PCN) operating in the 1,5/1,6/2,4 GHz and 2 GHz frequency bands

4. Theory of Operations-Architecture

The IRIDIUM network is a global satellite communications system. The system supports voice, data, fax, and messaging traffic to and from subscriber equipment across the world or to a Public Switched Telephone Network (PSTN) through the IRIDIUM Gateway. The services supporting safety services are basic voice calling (telephony), short burst data, and RUDICS

Basic Telephony – (TS11) allows an IRIDIUM subscriber when properly provisioned in the D900 and has a valid handset and SIM card to place or receive calls to/from virtually anywhere in the world. Most accounts are additionally provisioned with Call Forwarding services (CFBusy, CFNreply, CFU, CFNreach, AllCF) and SMS Mobile Originated (SMS-MT)(TS21)

Short Burst Data (SBD/ESS) Service – A packet bearer capability (non-GSM) that provides an ultra-efficient, non-circuit switched, high-capacity ACK'ed means of transmitting and receiving packets of data (up to 1960 bytes) to/from compatible SBD subscriber devices across the IRIDIUM network to a specified email address. Applications include remote monitoring, tracking, event reporting, and other asses monitoring. These remote asses typically transmit either periodically or when triggered by a "wake-up" call or a local event.

The device must be properly configured within the SBD subsystem to use this service. Provisioning data includes the subscriber equipment identifier (IMEI) and email delivery addresses.

RUDICS - allows custom devices in the field to connect to servers on the WWW by encapsulating the transmitted data in TCP/IP. It provides nothing more than a pipe by which to transmit customer data. Can be configured on a customer basis for PPP or MLPP depending on application or customer's request. The customer must be properly provisioned in both the SSS and the RUDICS ACS (access control server) in order to use this service.

In order to explain how the system has been implemented, the system will be divided up into four segments:

1. Space Segment
2. System Control Segment
3. Gateway Segment
4. Subscriber Segment

4.1 Space Segment

The space segment consists of a satellite constellation made up of at least 66 Space Vehicles (SVs) orbiting the earth in six low earth orbital planes through the earth's polar axis, AS SHOWN IN Figure 4-1, IRIDIUM Satellite Constellation. The SVs form a giant packet network which passes all IRIDIUM based traffic.

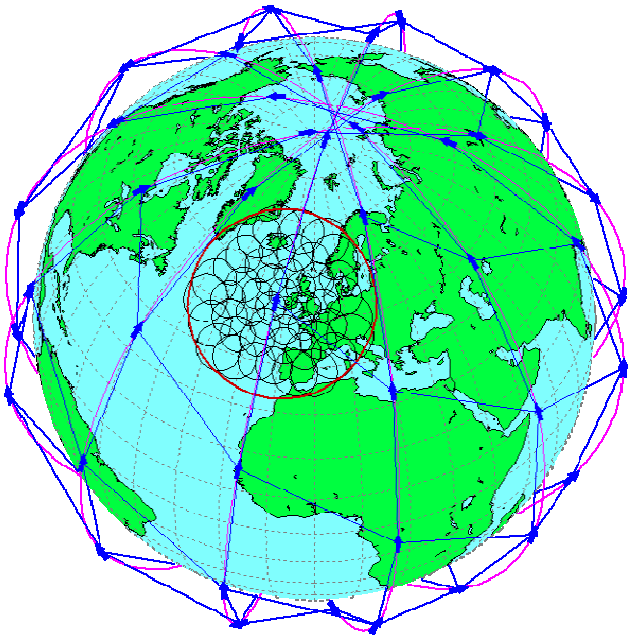

IRIDIUM Satellite Constellation

FIGURE 4-1

The SVs are equally distributed among the six orbital planes. In each plane, 11 SVs are Mission SVs and one is a standby which can be maneuvered into position should an SV in that orbit fail or expire.

The six orbital planes are all polar orbits at a height of approximately 420 nautical mils with each plane at a slightly different height to avoid SV collisions at the poles.

Each SV has an orbital period of approximately 100 minutes and an average velocity of 16557 MPH.

Orbital plane spacing is 31.6 degrees for the normal planes and 22.1 degrees for the counter rotating seam. In plane spacing between SVs is 32.7 degrees.

The space vehicles (aka satellites or SV) provide the communication links between the ISUs, and between ISUs and GWs during an established call. The SVs also provide communications between GWs during call processing and call maintenance.

Communication links also exist between the SVs and the SCS for managing the constellation.

The IRIDIUM network employs L-Band and K-Band radio links to carry communications packets containing both user and management data between terrestrial and space elements.

L-Band radio links provide the physical connections between IRIDIUM Subscriber equipment and SVs.

L-Band radio links are allocated from the frequency spectrum between 1616MHz and 1626.5 MHz. The frequency band is divided into a Ringing/Paging sub-band and 30 traffic sub-bands. The sub-bands are further divided into 8 frequencies that can be used for traffic or other types of

overhead channels. The sub-bands are dynamically allocated to beams of an SV based on configuration information provided by the System Control Segment (SCS or SNOC). Each beam projected by an SV has two or more sub-bands allocated to it, depending on traffic conditions.

A frequency re-use plan allows radio frequencies to be re-used among beams.

K-Band radio links: The gateways and the SCS are connected to the SV constellation by feeder links in the K-Band range of frequencies. Each SV is connected to its in-plane and cross-plane neighbors via K-Band cross links, as shown in Figure 4-2, Satellite Crosslinks.

Ground sites are connected to the constellation through K-Band feeder links in the frequency ranges 19.4 – 19.6 GHz downlink and 29.1 – 29.3 GHz uplink.

Each GW is connected to an SV passing overhead and uses beam hand off processes to maintain this link as the constellation changes over time.

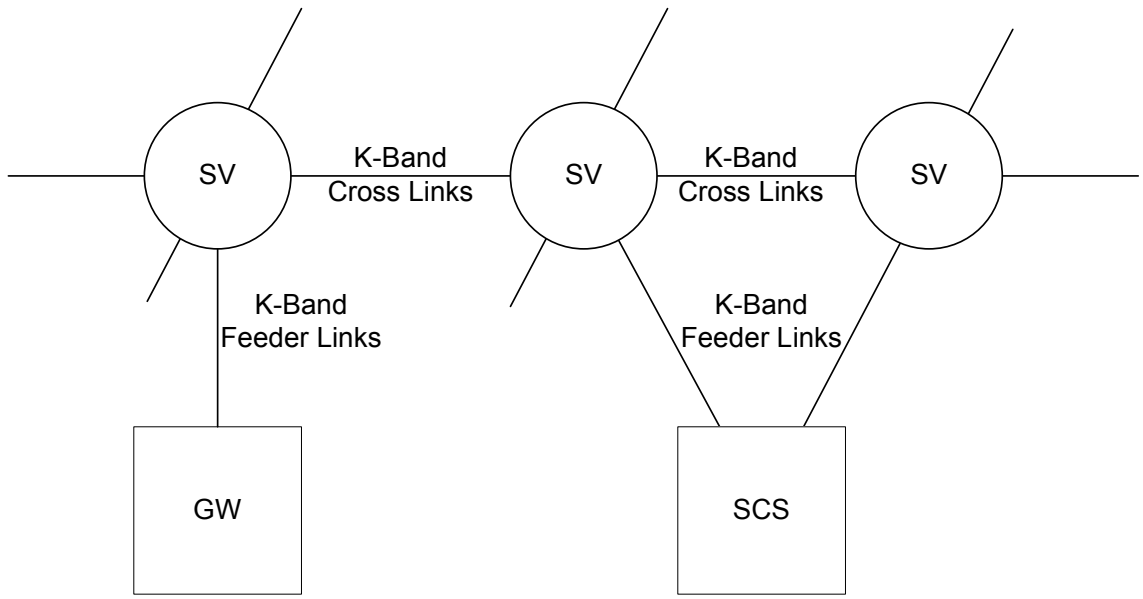

The K-band feeder links between terrestrial entities and the SV network and the cross links between SVs

Satellite Crosslinks

FIGURE 4-2

The SVs carries in addition to IRIDIUM-specific hardware and software, thrusters, fuel tanks, and other standard satellite equipment. Each SV uses power generated from two large solar panels.

Three Main Mission Antennas (MMA) provide communication links between the subscribers

and the SV using L-Band frequencies. Each MMA projects a pattern of 16 beams to the ground, giving a total of 48 beams per SV. These beams create overlapping cells on the ground as shown in Figure 4-3, SV Cellular Footprint (Beams), where: MMA1 produces beams 1 to 16, MMA2 beams 17-32, and MMA3 beams 33 – 48.

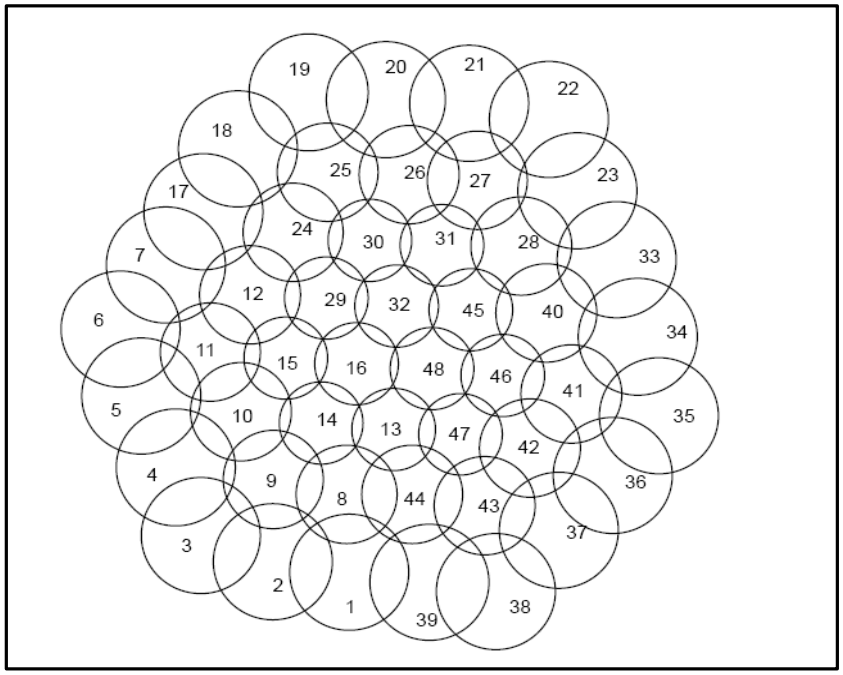

SV Cellular Footprint (Beams)

FIGURE 4-3

There are also spare satellites in each plane in the event of a satellite disability.

Data transmission over the SV network is based on Asynchronous Transfer Mode (ATM) technology, adapted for the IRIDIUM network.

Data is exchanged in units of IRIDIUM Transfer Mode (ITM) packets, which are fix-sized cells containing a routing header and other information.

ITM packets are used to carry all types of data through the constellation including subscriber voice and data, signaling data, telemetry data from SVs, and other control data used in managing the network.

4.2 System Control Segment

The system control segment (SCS) is the central management function in the IRIDIUM system. It provides global operation, support, and control services for the SV constellation, delivers SV tracking data to GWs, and performs the termination control function of messaging use a Message Termination Center (MTC).

The SCS operates, administers, and maintains the SV constellation and supports the GW's in their operations, as shown in Figure 4-4, Satellite Control Segment Diagram. The SCS comprises three main components: Telemetry tracking and control sites (TTAC), Control Facilities (CF), and Operational Support Network (OSN).

TTAC – Monitor the constellation, providing all the necessary telemetry and tracking information to the control facilities. There are three fixed TTAC sites located in Iceland, Western Canada, and Eastern Canada. A mobile TTAC is available which can be located where ever deemed necessary.

Control Facilities - within the SNOC and consists of the Satellite Network Operations Center (SNOC), Backup Snoc (BSNOC), and the Technical Service Center (TSC).

SNOC and BOC - are both capable of performing SV control and network management. The SNOC is located in Landsdown Virginia, and the BSNOC is located at the TSC in Chandler, Arizona.

The CF Functions include constellation management by use of TTACs, Prediction and planning of IRIDIUM resources, Distribution of necessary information to GWs and SVs, detection and isolation of system faults, management of non-constellation service vehicles and launches, and message information broadcasts. Additionally, the SNOC monitors the IRIDIUM Tempe GW from midnight to 0600 (AZ time).

TSC – This facility provides control and special engineering support for IRIDIUM operations such as SV insertion, GW installation and start up, and level 3 support for technical issues.

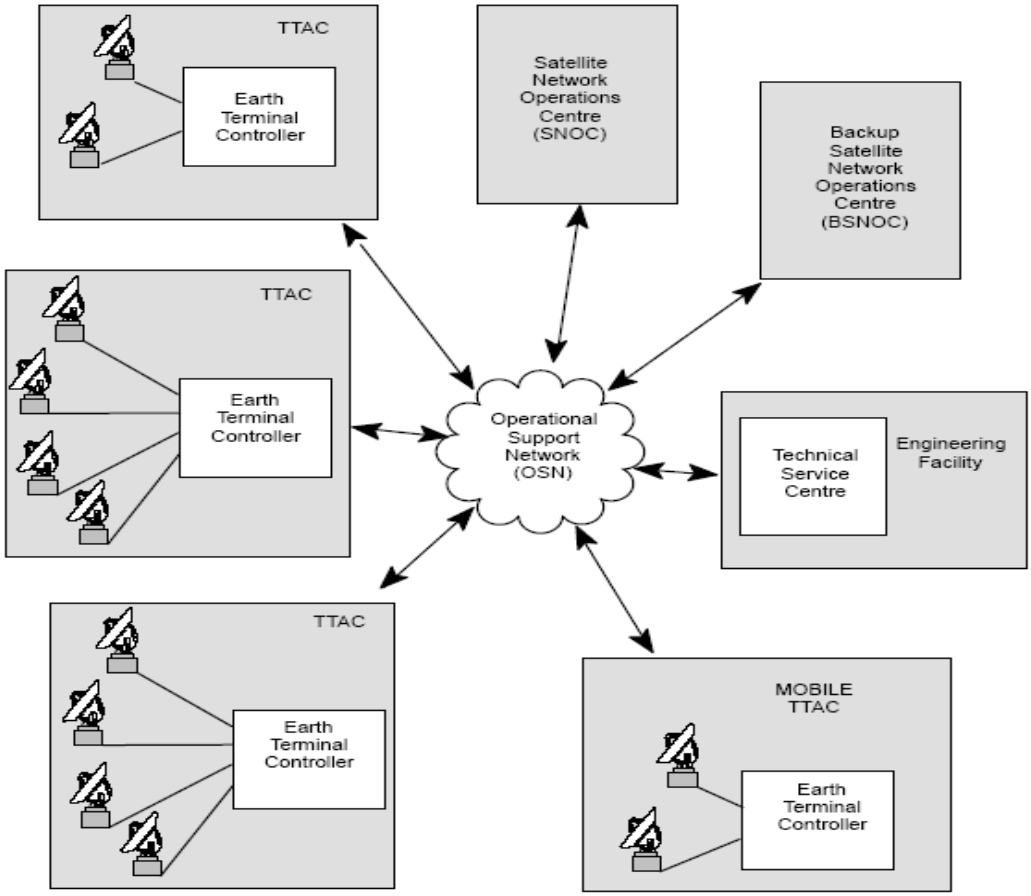

Satellite Control Segment Diagram

FIGURE 4-4

4.3 Gateway Segment

The IRIDIUM Gateway (GW) provides a number of roles.

1) Setup and maintain basic and supplementary telephony services. The GW provides the interface for communication between IRIDIUM subscribers and between IRIDIUM subscribers and PSTN users world-wide.
2) Provide messaging and data services (including Direct Internet, RUDICS, dial-up data and Short Burst Data (SBD).
3) Interface to the PSTN
4) Interface to the Constellation
5) Home GW functions.
6) Visited GW functions
7) Messaging processing and services
8) Management and billing functions.

The GW is split into two functional areas:

1) The GW management System (GMS)
2) The GW operational elements

The GMS provides primarily observation and maintenance functions for the GW via the Operations and Maintenance Center- Radio (OMC-R) and Operations and Maintenance Center-Gateway (OMC-G). Some of the tasks involved are:

- Alarm handling
- Statistics collection
- Subsystem software and database management
- Support of network queries and re-configurations
- GW element monitoring
- Call billing record management

The core of the GMS is the OMC-G. It provides the logical connectivity between the components of the system for operations. The primary tasks of the OMC-R are to manage the ECS and support the OMC-G. All GW elements (except SBD, RUDICS, and Apollo) report to and are managed by the OMCG or OMCR.

The GW is comprised of the following network elements:

1) SSS – Siemens D900
2) Earth Terminals (ET)
3) ETC Transmission Subsystem (ETS)
4) ETC Communications Subsystem (ECS)
5) Message Origination Center (MOC)

6) Notification Center (NC)
7) Web and Email messaging server (WEMS)
8) RUDICS
9) ETC Short Burst Data Subsystem (ESS)

Figure 4-5, IRIDIUM Gateway Diagram, shows the Gateway elements and their connectivity.

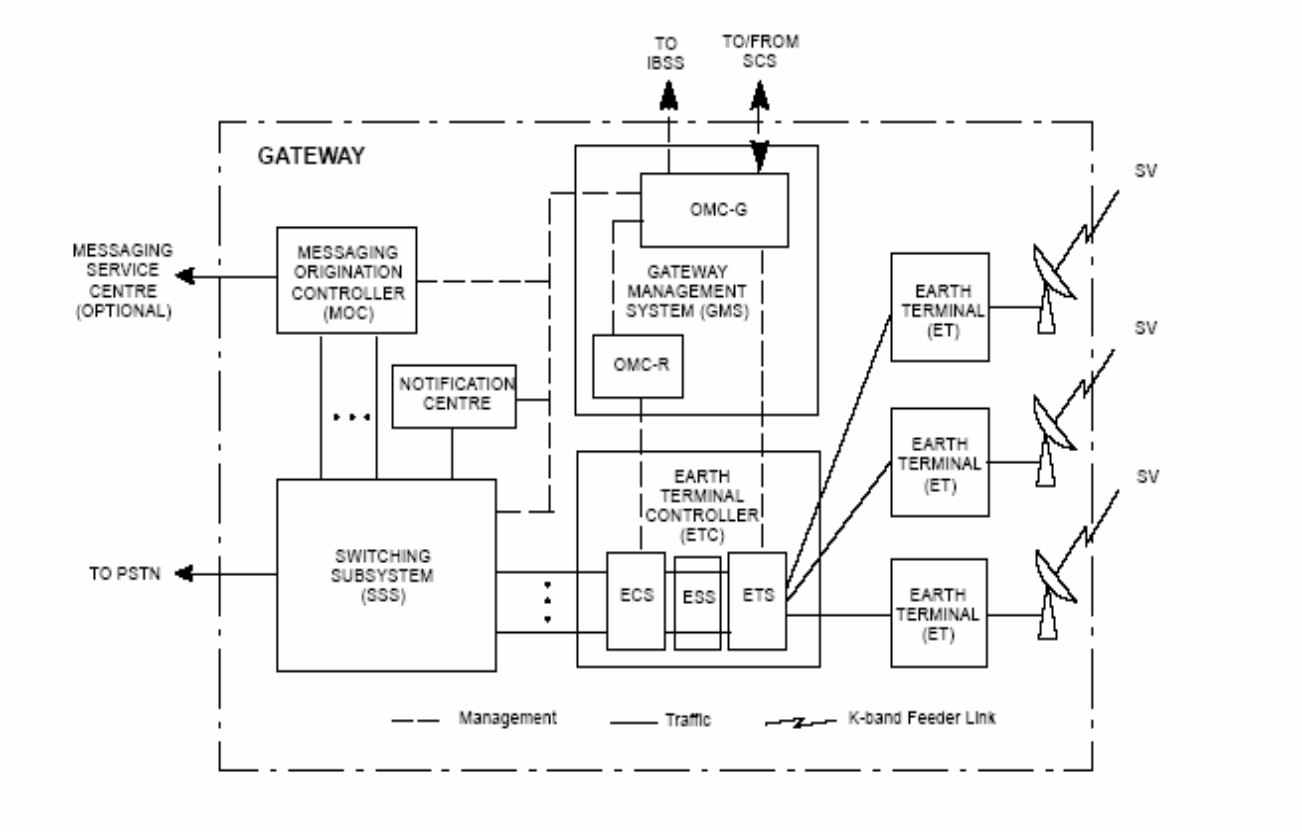

IRIDIUM Gateway Diagram

FIGURE 4-5

4.3.1 SSS – Siemens D900

The SSS, is a standard GSM Mobile Switching Center (MSC) comprising of a Siemens D900 Switch with some additional ss7 user parts which were specifically designed for IRIDIUM. It provides switching and signaling functions for the ISUs located in the GW area, Database for subscriber data and mobility management, and serves as the interface between the IRIDIUM Network and the PSTN.

In addition, it interfaces with the MOC and NC for message services, with ECS for Call Processing (CP) functions, and with the GMS for O&M functions.

The major components/functions of the SSS are the Home Location Register (HLR), Visitor

Location Register (VLR), Equipment Identity Register (EIR), and Authentication Center (AUC).

4.3.1.1 Home Location Register (HLR)

The HLR manages the IRIDIUM subscribers within the area controlled by its GW. The Database contains the international mobile subscriber Identity (IMSI), Mobile Subscriber ISDN Number (MSISDN), Mobile Subscriber Roaming Number (MSRN), and other subscriber service information (call forwarding, barring, data services, etc).

4.3.1.2 Visitor Location Register (VLR)

The VLR stores information for all ISUs registered at the GW (last time on network, LAC, Cell, authorized services, etc).

4.3.1.3 Equipment Identity Register (EIR)

The EIR utilizes the IMEI (International Mobile Equipment ID) that is distinctly identifiable for each mobile unit. This register provides a mean to bar unauthorized units access to IRIDIUM services. The register is divided into three lists; White – Approved equipment, Grey – Equipment to be observed, and Black – equipment barred from service.

4.3.1.4 Authentication Center (AUC)

The AUC is used to ensure the subscriber is a legal customer and allowed to utilize the IRIDIUM network.

4.3.2 Earth Terminals (ET)

The earth terminals (ET) are the physical data links between the GW and the SV's. The ET facilities include the Earth Terminal Interface (ETI), ET Radio Equipment, and K-Band Antenna.

- ETI – provides a communication interface between the ET radio equipment and the E1 link from the ETS.
- ET Radio Equipment – provides K-Band radio transmission and reception.
- K-Band Antenna – provides the K-Band air interface with the SV constellation.

4.3.3 ETC Transmission Subsystem (ETS)

The ETC Transmission Subsystem (ETS) provides the control functions required to establish and maintain continuous communications between the GW and SVs.

The ETC connects to the ETS and controls the K-Band communications feeder links with the SVs, distributes data received over the link and performs Call Processing Location Determination (CPLD) computations during the call access process. In addition, it is responsible for ITM routing, protocol conversion, CPLD, ring alert, and system synchronization.

4.3.4 ETC Communications Subsystem (ECS)

The ETC communications subsystem (ECS) is the communications and controlling interface between the SSS, ESS, and ETS. It provides:

- Most of the IRIDIUM-specific call processing functions.
- Digital data translation between PCM format as used on the terrestrial network and IRIDIUM Transfer Mode (ITM) as used on the Satellite Network.

- Call Processing involving the setting up, maintaining, and tear down of calls. Very similar in functionality to a GSM BSC.
- Cut through – improves voice quality, delays, and saves K-Band resources on the SVs.

4.3.5 Message Origination Center (MOC)

The MOC provides the IRIDIUM paging (DMS, MTLI, VMWI) and Voicemail services. The MOC is interconnected to the SSS (via E1), NC (via smpp/ip ethernet), and WEMS (TNPP/IP).

It is the starting point for both messaging (Short Message Service) and paging.

4.3.6 Notification Center (NC)

The notification center (NC) provides a facility for the storage and forwarding of messages through the SSS. It is connected to the SSS (2 – E1 signaling links) and MOC (SMPP/IP).

4.3.7 Web and Email messaging server (WEMS)

The web and Email server (WEMS) processes all IRIDIUM destined messaging or paging requests from the WWW or from IRIDIUM's email server. It performs conversion of HTML and SMTP into the TNPP protocol which the MOC uses. The WEMS is physically connected to the MOC's TNPP port number 4 via the GIE Terminal server (Cisco 2500 Series).

The WEMS is comprised of two redundant Sun platforms (WEMS1 & WEMS2) using Solaris 8 and MySql. It provides a web-based querying tool into the MySql database to assist in troubleshooting customer issues.

4.3.8 Router UDI Customer Service (RUDICS)

The Router UDI Customer Service (RUDICS) server provides access from the IRIDIUM network to the Internet or dedicated circuits (or visa versa). Is actually only a "pipe" by which data between two users can be transmitted. Protocols are customer configured.

RUDICS provides a closed user group functionality whereby only those configured for a particular destination will be able to reach that destination. The server is connected to the D900 via ISDN links.

4.3.9 ETC Short Burst Data Subsystem (ESS)

The ETC short burst data subsystem (ESS) is also referred to as SBD. It supports the IRIDIUM short burst data service and sits between the ETS and ECS, monitors all signaling traffic destined for the ECS and checks for a HGW access message with an access parameter set to "reason for access = 2".

The ESS is comprised of the SBD ETC Processor (SEP), the Short Burst Data Post Processor (SPP), the Diagnostic Support System (DSS), Pulizzi power controller, and SBD By-Pass Switch (SBS).

4.4 Subscriber Segment

There are several classes of user terminals supported by IRIDIUM. The IRIDIUM Subscriber Unit (ISU) and pager units are depicted in Figure 4-6, IRIDIUM ISU and Pager Products. In order to support fixed satellite-based wireless services to remote regions lacking terrestrial

communications infrastructure, IRIDIUM offers docking stations, fixed IRIDIUM units and portable phone booths which can be operated by commercial or solar power.

IRIDIUM ISU and Pager Products

FIGURE 4-6

In addition to phones and pages, IRIDIUM has developed an L-band transceiver (LBT) for use by avionics manufacturers. There are two types of LBTs, the 9522A and the 9601 which are shown in Figure 4-7, IRIDIUM LBT's. The 9522A supports both circuit and packet mode communication service. The 9601 unit is a modem designed to supports packet mode, short burst data service. One LBT represents one channel of communications for an aircraft.

The LBTs are provided to IRIDIUM approved avionics manufacturers who design their avionics units to contain the LBT and provide the aircraft system interfaces. The avionics manufacturers are responsible for adherence to all applicable aviation regulatory agency requirements, such as the FAA FARs. The avionics manufacturers are responsible for all parts manufacturing authority, and aircraft installation certification, which includes airworthiness and environmental testing.

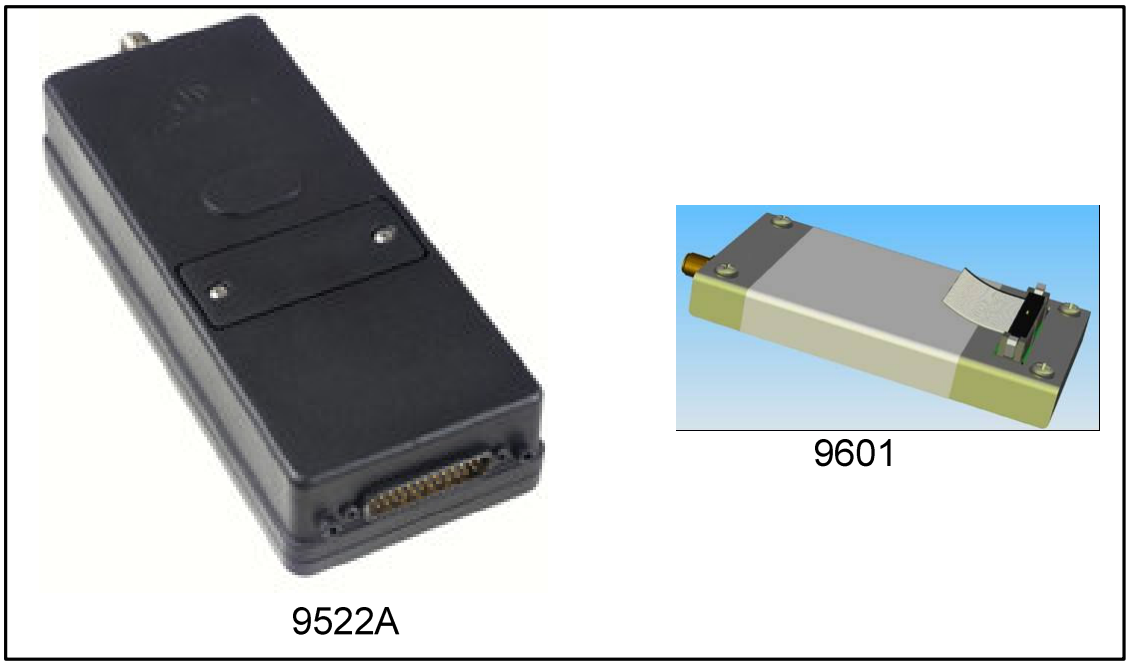

IRIDIUM LBT's

FIGURE 4-7

All ISU's comply with the applicable standards and requirements, including ITU, European Telecommunications Standard Institute (ETSI) standards as well as applicable FCC requirements. The ITU Recommendation ITU-R M.1343 "Essential Technical Requirements of Mobile Earth Stations for Global Non-Geostationary Mobile-Satellite Service Systems in the bands 1-3 GHz" has been used to establish the appropriate required parameters. The design and performance of the ISU's are also consistent with the European CTR 041, which defines Common Technical Regulation for such terminals, and with ETSI EN 300 831 V1.1.1, which defines Human Health and Safety aspects of terminals. The FCC requirements with which the ISU's comply with include Part 25 of the FCC Rules, and Amendment of the Commission's Rules to Establish Rules and Policies Pertaining to a Mobile Satellite Service in the 1610-1626.5/24.88.5-2500 MHz Frequency Bands, Report and Order, 9 FCC Rcd 5936 (1994).

The ISUs employ a time domain duplex (TDD) approach wherein they transmit and receive in an allotted time window within the frame structure. The TDD structure is built on a 90 ms frame and is composed of a 20.32 ms guard time, followed by four 8.28 ms up-link time slots and four 8.28 ms down link time slots, with some guard times interspersed as is depicted in Figure 4-8, IRIDIUM L-Band Frame Structure, below. Since the system is TDD, the subscriber units transmit and receive in the same frequency band. The access technology is a Frequency Division Multiple Access/Time Division Multiple Access (FDMA/TDMA) method whereby a subscriber is assigned a channel composed of a frequency and time slot in any particular beam. Channel assignments may be changed across cell/beam boundaries and are controlled by the satellite.

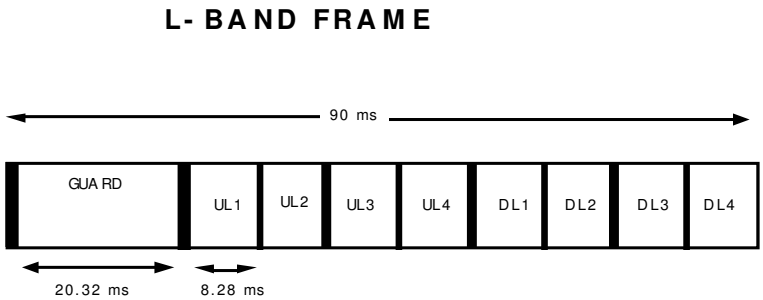

IRIDIUM L-Band Frame Structure

FIGURE 4-8

The frequency band is multiplexed using a 41.666 kHz channel plan as depicted in Figure 4-9, IRIDIUM L-Band FDM Format, below.

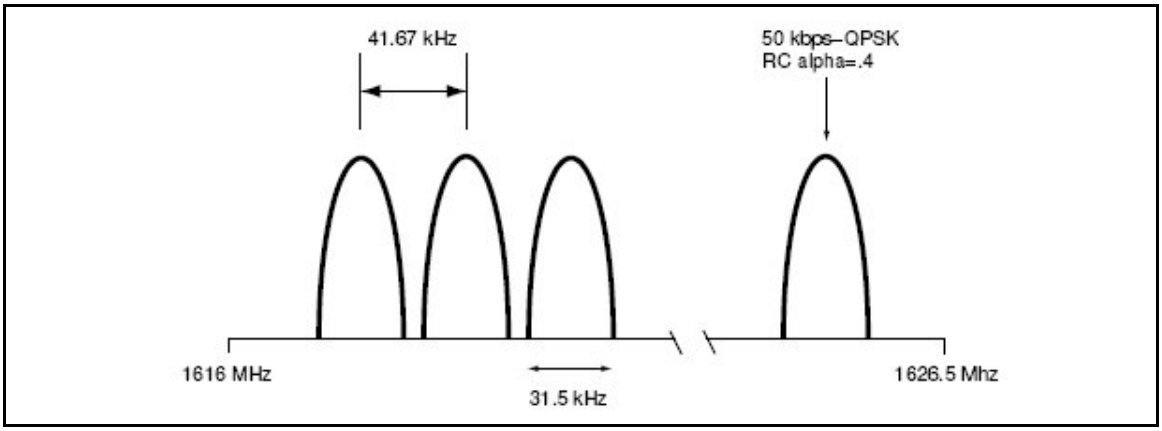

IRIDIUM L-Band FDM Format

FIGURE 4-9

The system uses a 50 kbps data rate and a Quadrature Phase Shift Keying (QPSK) modulation format on the 8.28 ms time slots and the 41.66 kHz FDM channels. The data is first differentially encoded before application to the QPSK modulator. Hence, the exact description is Differentially Encoded Quadrature Phase Shift Keying (DEQPSK), though the spectrum characteristics are identical to QPSK. The DEQPSK modulation results in a 25 ksym/sec symbol rate on the channels which allows for a relatively narrow channel bandwidth. The modulation symbols are pre-filtered before application to the modulator which further reduces the transmission bandwidth required. The L-Band signal parameters are summarized in IRIDIUM L-Band Signal Parameters table below.

IRIDIUM L-Band Signal Parameters

Parameter	Description
Multiplexing Method	TDMA/FDMA
Duplex method	Time Domain Duplex
Modulation format	DEQPSK
Data rate	50 kbps
Symbol rate	25 ksps
Modulation Prefiltering	square root raised cosine filtering in the frequency domain with roll off factor = .4
Occupied BW per channel	31.5 kHz
Channel Spacing	41.6666 kHz

4.4.1 Transmission Characteristics

IRIDIUM user terminal antennas are hemispherical with omni-directional gain patterns.

While the maximum gain is less than 3.5 dBic, it is typically a maximum of 3 dBic.

After circuit losses, the maximum power delivered to the antenna by the typical implementation is 6W average during a time slot. The system provides the full average link margin at maximum power, but is also capable of reducing transmit power and adjusting link margin according to the local fading conditions. This is accomplished with an adaptive power control system which can reduce the subscriber transmit power by up to 12 dB but can also adjusted in 1 dB steps over the complete range. The effect of the power control is to allow the subscriber equipment to operate at the lowest power necessary to assure quality communications.

4.4.2 Vocoder

IRIDIUM user terminals support digital voice using an Advanced Multi-Band Excitation (AMBE) vocoder. The AMBE vocoder uses a speech compression technology patented by Digital Voice Systems, Inc.

4.4.3 IRIDIUM Identifiers

IRIDIUM subscribers may be distinguished by several identifiers. Each user is assigned an IRIDIUM Network Subscriber Identifier (INSI) which is a permanent number stored on the user's SIM card and in the HLR. The INSI is analogous to the GSM Individual Mobile Subscriber Identifier (IMSI), and it is used to identify a mobile subscriber. To maintain subscriber confidentiality, the INSI is only transmitted over the air when a valid Temporary Mobile Subscriber Identifier (TMSI) is unavailable. A TMSI, which is analogous to the GSM TMSI, is a temporary identifier assigned to a mobile subscriber and stored on the user's SIM card and at the HLR/VLR. The TMSI is periodically changed based on system parameters and is used to identify the user over the air. The Mobile Subscriber ISDN Number (MSISDN) is the IRIDIUM subscriber's phone number. A gateway can determine an IRIDIUM subscriber's

home gateway by examining fields within the INSI or MSISDN, both of which can be determined by using the TMSI to access subscriber information at the gateway. The IMEI is a permanent identifier assigned to each ISU, not an IRIDIUM subscriber (SIM card).

5. Services Supported

The IRIDIUM system carries voice, data, fax, and messaging traffic to and from subscriber equipment across the world or to a public switched telephone network through the Gateway. Subscribers include business travelers, emergency assistance, maritime, aviation, and government and military users. Subscribers are categorized in the event it becomes necessary to shed general users from the system to prevent overloading the system during emergencies.

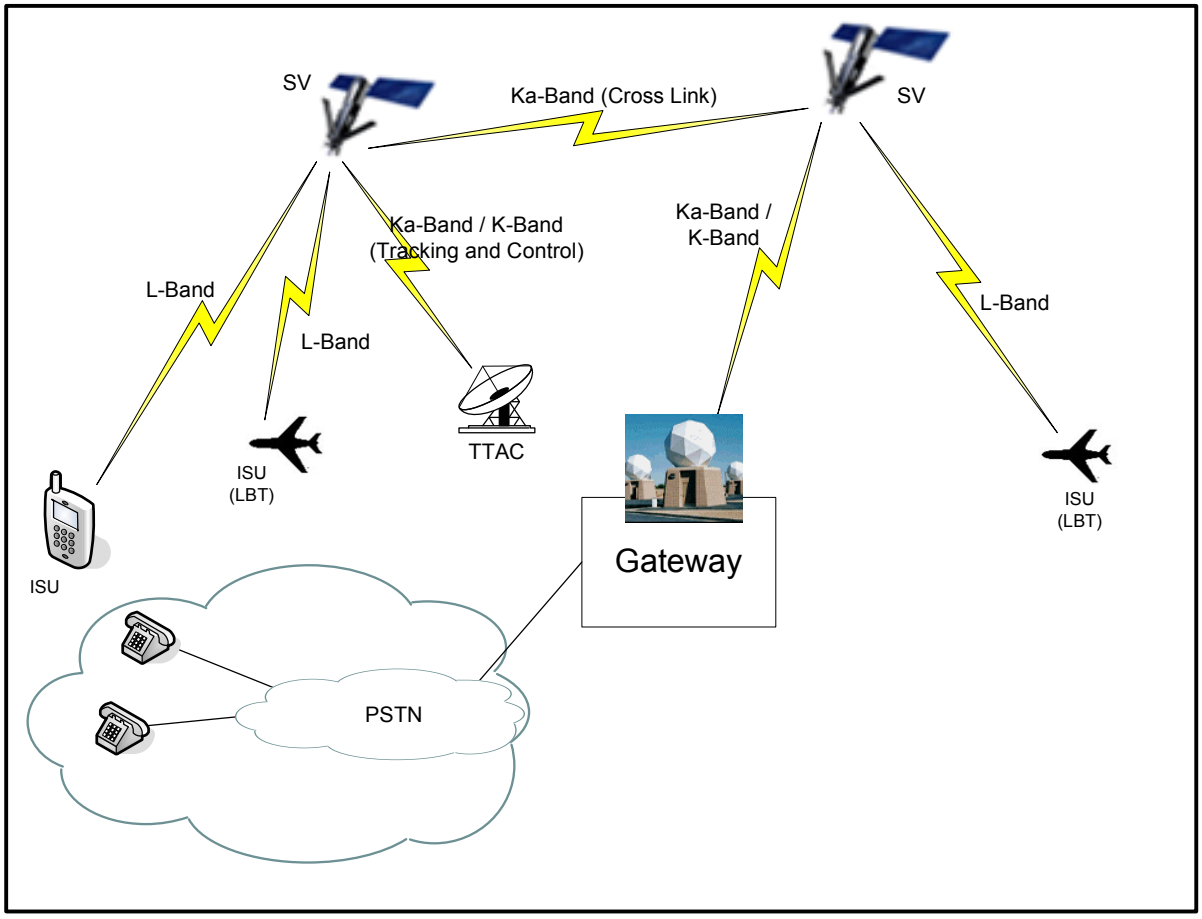

IR

IDIUM Network and PSTN

FIGURE 4-10

When using the system, the satellite receives the request for usage and then asks the Gateway for permission. The entire process is initiated upon the user entering into their ISU, the number to be called, and then pressing the OK, or Send, button.

The Gateway contains a number of components that validate the requesting IRIDIUM subscriber unit (ISU) as follows:

1) Process the request

2) Check the location of the user's update the registration information
3) Verify the identity

Only validated ISU's are allowed to use the system. If the ISU is connecting to another ISU, a direct communications path is made through the satellite constellation. If the ISU is attempting a call to a ground based user, the information is sent through the Public Switched Telephone Network (PSTN) to the local exchange and to the end-user's device. A billing system is set up within the Gateway which enables calls based on business rules and records calling information for end-user billing.

5.1 Security

All physical properties within IRIDIUM Satellite are maintained in a secure fashion with extra secure measures, locked passages with access on a as-needed" basis, deployed at the Gateway, Satellite network operations center and technical support center.

In addition, the following security measured have been taken to assure secure network services

- Handling of Miss-directed Calls

  Consist of validation of authorized calling telephone number and validation of authorized personal identification number (PIN).

  Each aircraft equipped with a valid safety services ISU, equipped with SIM with AC-14, have a list of telephone numbers authorized to establish calls. This list is maintained in a database. The system verifies the calling number against the list. If the number is on the list the call is allowed to continue, f not, the call is prohibited.

  The caller, from the authorized number must then enter the prescribed PIN. The user is allowed three attempts to enter the proper PIN. After the third attempt, the call process is halted and the caller must re-dial the aircraft telephone number and re-enter the PIN sequence.
- Fraud Protection is provided during the Access process. During this process the GW determines if the requesting ISU is providing its own geographical location. If true, the system request a check of the geographical location provided by the requesting ISU with the Beam ID the ISU is using. If the beam coverage location associated with the Beam ID does not match with the ISU provided location, the ETS sets a fraud flag, the ECS sends ISU the "Access Decision Notification" message with the indicator set to access_denied, and service is denied.
- Denial of Service due to other business rules is supported during the Access, Registration and Authentication processes. These rules can be made available to the proper authorities, on an "as needed" basis.
- Protection of GTA communications

  Consist of validation of authorized calling telephone number and validation of authorized personal identification number (PIN).

  Each aircraft equipped with a valid safety services ISU, equipped with SIM with AC-14, have a list of telephone numbers authorized to establish calls. This list is maintained in a database. The system verifies the calling number against the list. If the number is on the list the call is allowed to continue, if not, the call is prohibited.

The caller, from the authorized number must then enter the prescribed PIN. The user is allowed three attempts to enter the proper PIN. After the third attempt, the call process is halted and the caller must re-dial the aircraft telephone number and re-enter the PIN sequence.

5.1.1 Voice Service

Every voice call must involve an ISU, whether the call is ISU to ISU, ISU to PSTN number, or PSTN number to ISU.

To handle and deliver calls, the system builds upon existing digital cellular standards, specifically Global System for Mobile Communications (GSM), but incorporates many additional features because of the system's space-based character.

Key elements of call handling, shown in Figure 5-1, are identical for all calls. These elements are:

1) Acquiring a traffic channel on a SV (Acquisition) by the ISU
2) Accessing the Gateway (Access) is the process of obtaining ISU access to the IRIDIUM network which can include:
3) Geolocation - Call processing location determination (CPLD – ETS)
4) ISU Parameter Download
5) Registration/Location update
6) Authentication of ISU SIM (SSS) including TMSI assignment (Authentication)
7) Call Establishment is the processes of setting up a call which include:

- Originating a call from an ISU (MOC) or PSTN via an ISC (MTC)
- Terminating a call at an ISU (MTC) or PSTN number via an ISC (MOC)

8) Call Maintenance is the process of maintaining a connection which include Handoff, Reconfiguration (cut through/intercept/grounding).
9) Call Release

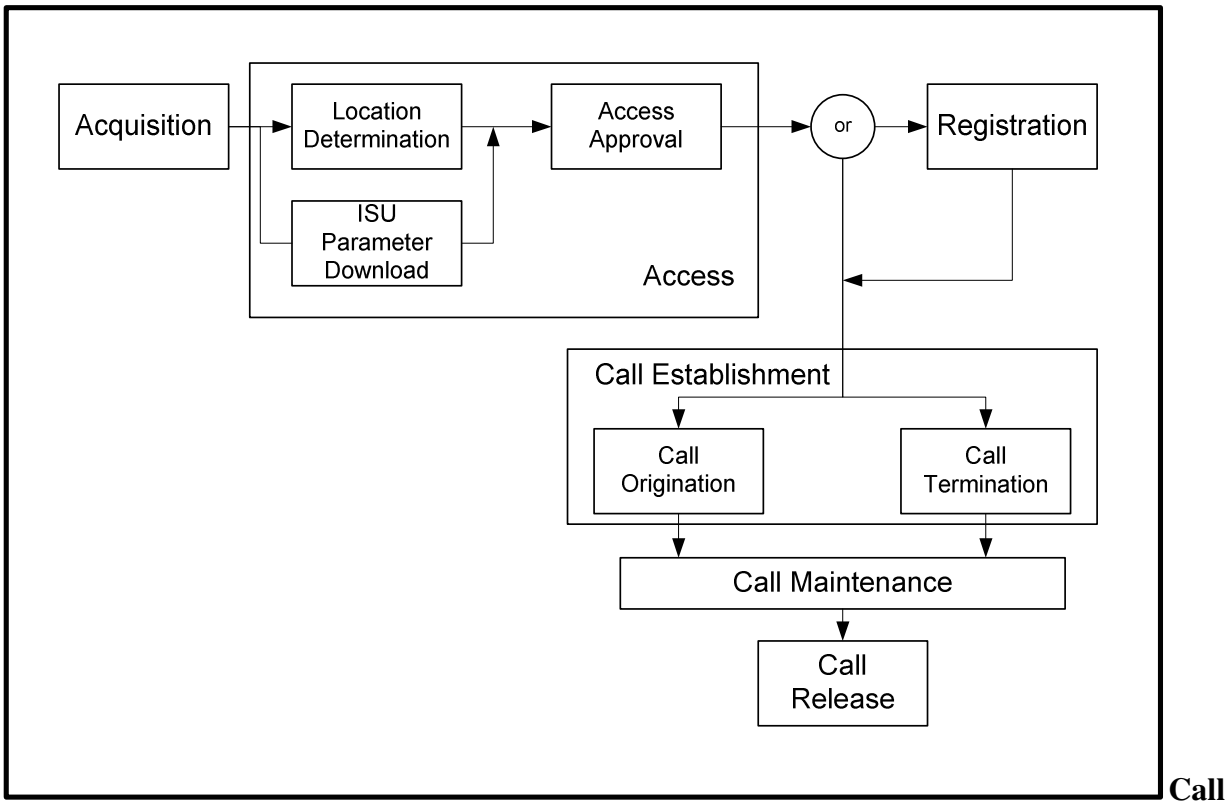

Call Handling Elements

FIGURE 5-1

For ease of explanation, each of the key elements will be described using an ISU originated call.

The sequence of events for ISU to PSTN, ISU to ISU and a PSTN to ISU calls will be described after explanation of the key elements.

5.1.1.1 Acquisition

Acquisition is the process of the Individual Subscriber Unit (ISU) obtaining a bidirectional communications channel, called a Traffic Channel, between the ISU and a Space Vehicle (SV). The process is initiated either by the ISU user taking some action to request a service that requires such a channel, or by the ISU responding to a Ring Alert that notifies the ISU of an incoming call.

Acquisition is the first step in obtaining service form the IRIDIUM system. It is the process of establishing a communication link between an SV and ISU. Acquisition by an ISU is necessary for registration, call setup, answering call terminations, or to initiate any service on the IRIDIUM system.

Under certain circumstances it is necessary o prevent users from making Acquisition attempts. Such situations may arise during states of emergency or in the event of a beam overload. During such times, the Broadcast Channel specifies, according to populations, which ISUs may attempt Acquisition.

Aviation safety services subscribers are assigned 14. The subscriber equipment reads the Acquisition Class from the SIM card that was programmed when it is initially provisioned. In

addition, subscribers may be members of one or more special categories (Acquisition Class 11 to 15), also held in the ISU. The system provides the capability to control a user's acquisition to the system based o the following acquisition classes:

15. IRIDIUM LLC Use
14. Aeronautical Safety Services
13. Reserved
12. Reserved
11. Fire, Police, Rescue Agencies
10. Emergency Calls

0-9. Regular Subscribers (Randomly allocated)

The use of acquisition classes allows the network operator to prevent overload of the acquisition or traffic channels. Any number of these classes may be barred from attempting Acquisition at any one time. If the subscriber is a member of at least one Acquisition Class that corresponds to a permitted class, the ISU proceeds with Acquisition.

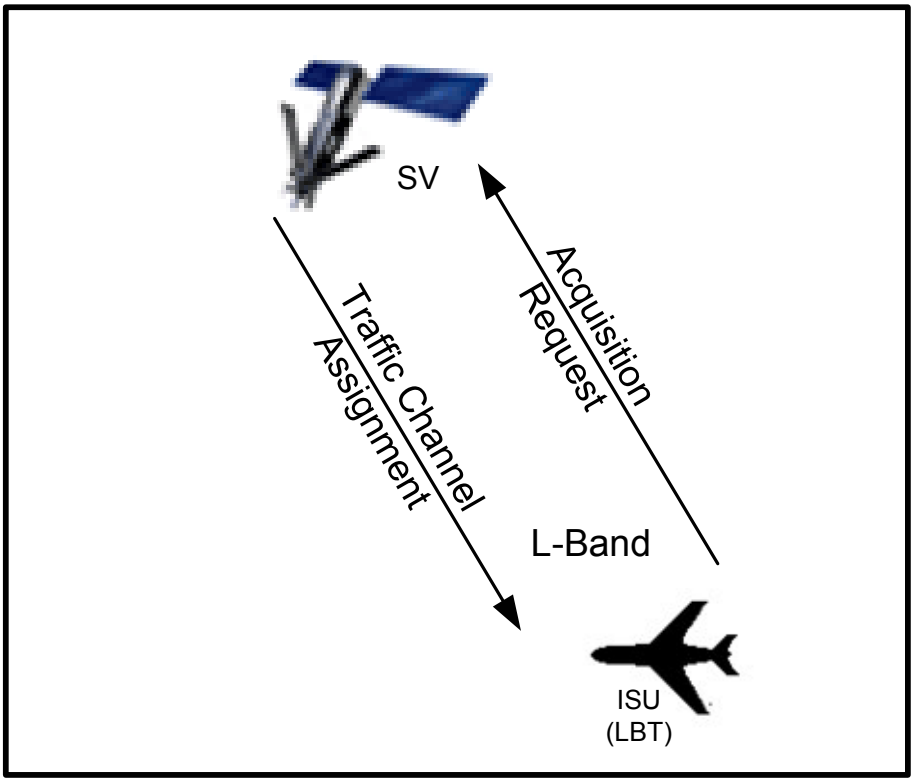

Acquisition

Figure 5-2

Acquisition consists of establishing a link between the ISU and the SV and acquisition control, as shown in Figure 5-2, above.

5.1.1.2 Access

The Access process determines the ISU's location with respect to Service Control Areas defined in Earth Fixed Coordinates. Based on the Service Control Area within which the ISU is found to be located and on the identity of the ISU's Service Provider, a decision is made regarding whether or not to allow service. The process, shown in Figure 5-3 below, is initiated immediately following Acquisition.

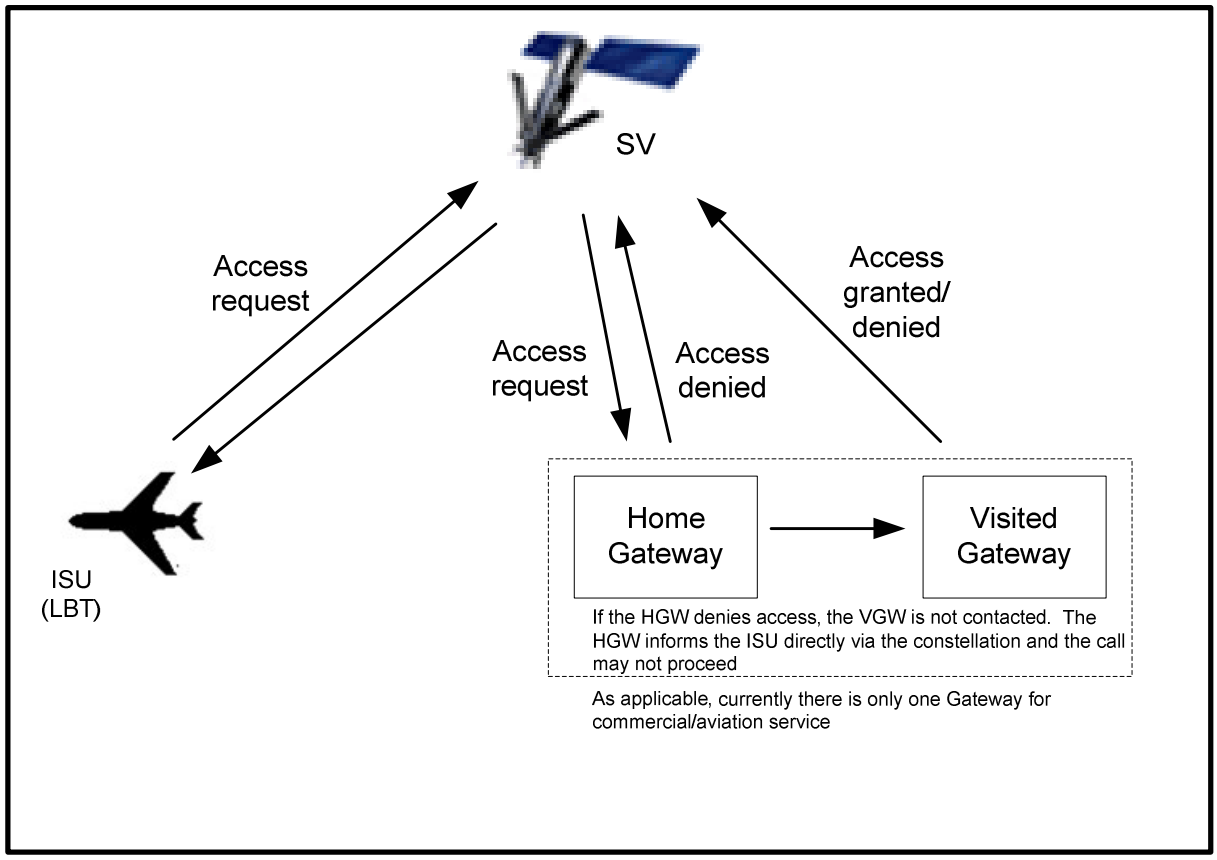

A

CCESS

FIGURE 5-3

Location information may be reported by the ISU based on an external source such as Global Positioning System (GPS) or an aircraft navigation system, or it may be determined by the Geolocation function contained within the Access function. The Geolocation function uses Call Processing Location Determination (CPLD) to provide an estimate of the user's location. The systems accuracy in determining location depends upon the relative geometry of the ISU and SV constellation, accuracy of measurements made by the ISU, accuracy of measurements made by the SV, and algorithm calculations.

IRIDIUM supports a method for a sovereign country to deny services to classes of subscribers roaming into its territory; it is split between the ECS and ETS. Services will be denied if the IRIDIUM system determines that the ISU is in an unauthorized area.

After location is determined, the Access approval-denial process starts when the ISU sends the" Access Request" through the SV and to the Gateway. Based on the calculated geographic location of the user, the Gateway ECS checks the user's current Service Control Area (SCA) against the user's service provider I.D. access information for that SCA. The Gateway downloads the ISU configuration parameters to update any changes that may have been made and the ECS determines the registration parameters as specified for the ISU's Location Area Code (LAC) to determine if the ISU needs to re-register. If there are no access restrictions for the ISU, an "Access Decision Notification" is sent and the Gateway indicates to ISU if Access has been denied or approved. If approved, the Gateway provides SV path information to the ISU.

The call processing, access request is as shown in Figure 5-4, below.

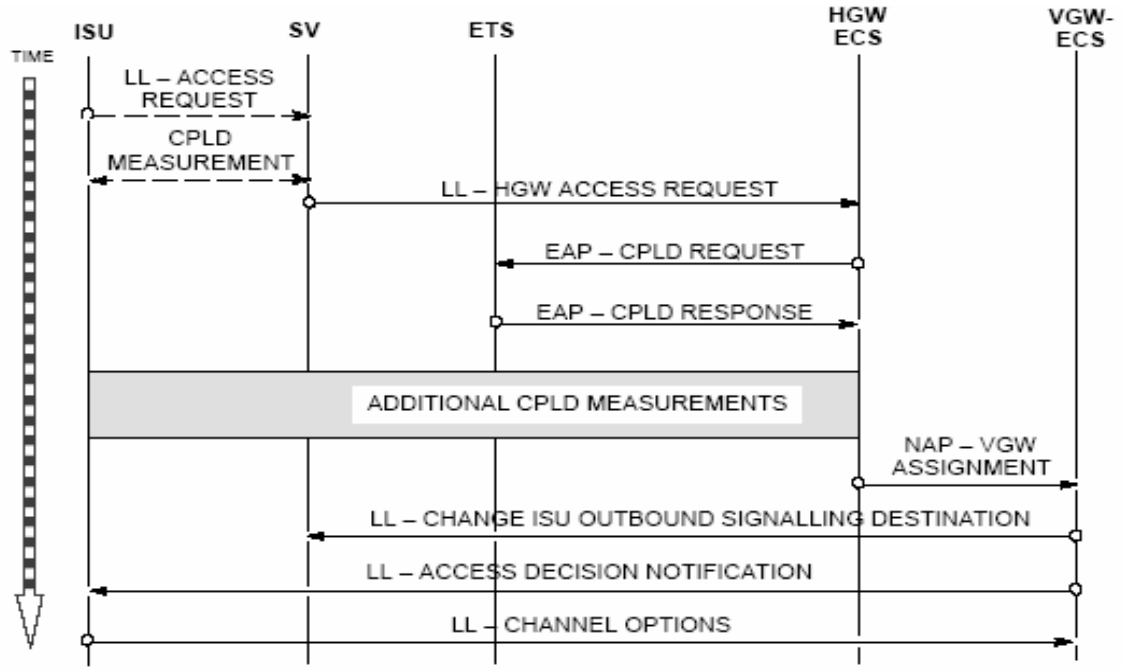

Access Message Flow Diagram

FIGURE 5-4

If access is denied, one of the following denial cause values will be provided via the Access Decision Notification from the HGW,

- Unknown
- Restricted area
- Indeterminable area

- Subscriber parameter unknown
- Insufficient resources
- Protocol error
- Access guard timer expiration
- NIL LAC
- Access Denied
- None

5.1.1.3 Call Establishment

Subsequent to gaining access to a GW, the ISU must register with the visiting GW (as applicable), if it has not already done so. There are three reasons for a re-registration, which is determined by the ECS,

1 The ISU has moved from one GW to another

2 The ISU has moved from one LAC to another

3 The ISU has moved away from it's old position by more than the re-registration distance as specified by the LAC. That is, the relocation distance calculated by the ETS is greater than the re-registration distance for the LAC.

Call control – If the ISU originates the call, it will then send the dialed number to the visiting GW (as applicable) and the GW will process the dialed number. Calls are set up under control of call processing functions provided by the ECS. This involves the transfer of signaling between GWs and interaction between GW elements to set up local or transit connections, as shown in Figure 5-5, below.

The GW (or VGW, as applicable) verifies the ISU's SIM to authenticate the business rules for the SIM are valid.

If the ISU's SIM is authorized to place the call, then the GW will allocate the resources to support the call, such as the circuits, transcoders and trunks.

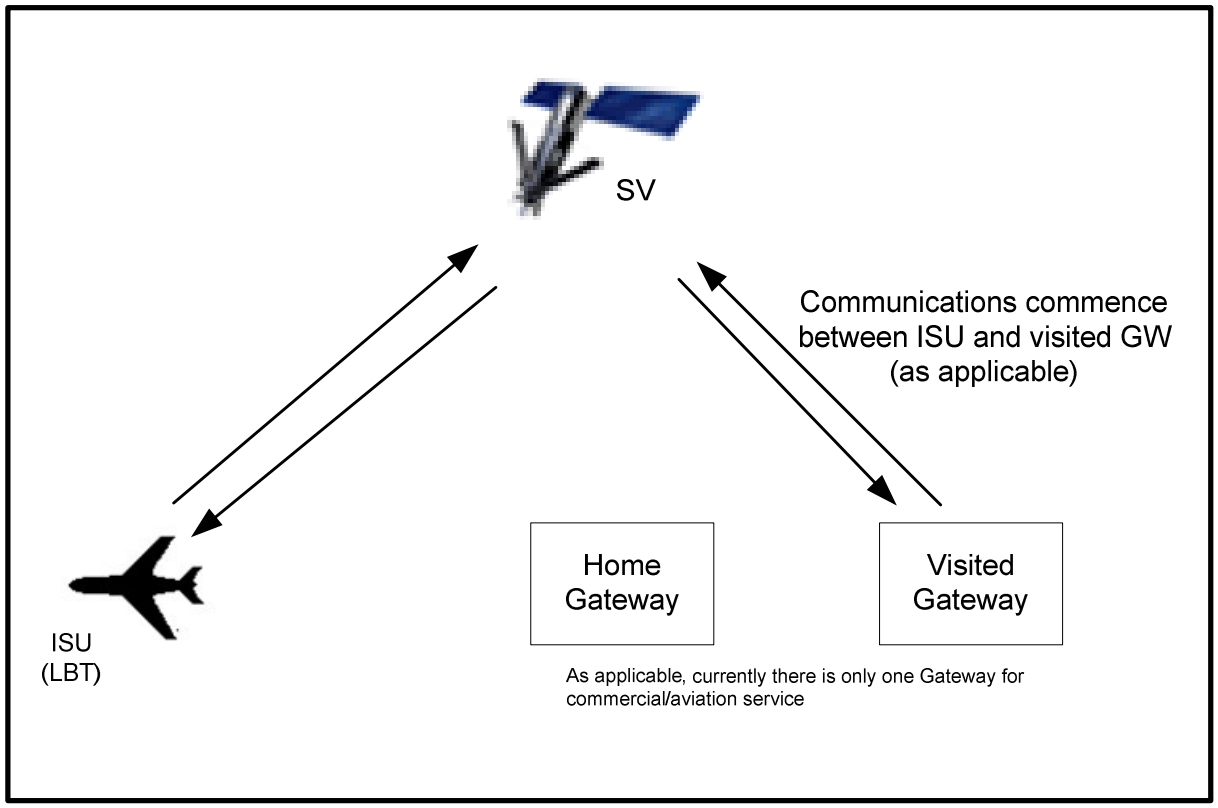

Call Establishment

FIGURE 5-5

The GW alerts the ISU that the called party is ring (provides a ring tone to the user's ear piece).

After a speech path has been created via the SV, the visiting gateway is removed from the speech path, which is referred to as cut-through. Cut-through is not done for data calls, supplemental and fax services. Cut-through reduces voice path time delay and conserves K-band resources

Upon the called party answering the call, the GW informs the ISU that the called party has answered the call and the ring tone is disabled.

5.1.1.4 Call Maintenance

Once the call has been established all nodes involved in the call enter a maintenance state. In this state, the network maintains the connection between the nodes. As the SVs orbit overhead, the network passes the traffic channel from SV to SV, a process referred to as handoff.

The IRIDIUM system SVs have highly directional antennas providing IRIDIUM system access to ISUs. These antennas are configured to project multiple beams onto the surface of the earth. Handoff is the process of an ISU moving from its current Traffic Channel to a different Traffic Channel, usually because SV motion has resulted in the current Traffic Channel no longer being suitable for continuing service. The handoff process is required in three situations

1) An ISU must be handed off between SVs as they move relative to the ISU (Inter-SV).
2) An ISU must be handed off between beams on an SV as beam patterns move relative to the ISU (Intra-SV).

3) As the inter-satellite geometry changes, radio channels are reallocated among the beams to manage interference. This process can cause and ISU to be handed off to a different channel in the same beam (Intra-beam).

In Intra-beam handoff, the ISU is unilaterally directed by an SV to transfer from the current channel to a new channel on the same SV. Reassignment typically occurs because the frequency reuse plan requires that the current channel no longer be generated in the current beam. It begins with the SV transmits a handoff order to the ISU specifying the new channel and the ISU complies and the old channel is available for reassignment.

For Intra-SV handoff, the ISU requests a handoff to a new beam and the SV allocates a new channel in the requested beam and informs the ISU. The ISU switches channels and the SV makes the previous channel available.

Inter-SV handoff begins with the ISU requesting a handoff to a new beam which is provided by a different SV, the SV forwards the request to the Gateway and the Gateway is put in control of the handoff. The setting SV forwards the request to the Gateway which queries the rising SV for a channel assignment. The rising SV allocates a channel and provides this channel to the Gateway. The Gateway prepares handoff information to be sent to all SVs and Gateways involved in the call. The setting SV sends the handoff order to the ISU. The ISU changes to the new channel, the ISU and the rising SV perform channel acquisition, the rising SV informs the Gateway that the handoff is complete, the Gateway informs the setting SV that the handoff is complete and the old channel can be released.

Messages are short numeric or alphanumeric data strings to be delivered to an ISU or Message Termination Device (MTD). Message services require special handling because of the power demands they place on SVs. They are sent at the highest possible power to increase reception probability. The IRIDIUM Gateway supports the following messaging services:

1) Directed Messaging Service (DMS) – delivers a numeric or alphanumeric message to a Message Termination Device (MTD).
2) Voice Messaging- records and stores voice messages for later retrieval by a notified provisioned subscriber
3) Enhanced Call Completion (ECC) – sends a message to a subscriber that could not be reached through telephony call processing
4) FAX Store and Forward – allows an IRIDIUM subscriber to send and receive FAX messaging with either IRIDIUM or PSTN users

Voice messaging must be treated differently than a voice call, because the terminating “user” is not a person, but a machine. The handling process is as follows:

1) Incoming voice messaging is routed to the MOC.
2) If the call is from a PSTN, the MOC conducts a voice prompt dialogue with the caller to determine the subscriber’s identity. This dialogue is not required if the call had been forwarded from and ISU.
3) The MOC creates a voice message notification message and sends it to the MTC in the SCS for delivery
4) MTC sends paging to MTD

All Facsimile are sent through a FAX Store-and-Forward Unit (SFU) in a Gateway. Each FAX mailbox within an SFU has a designated IRIDIUM number by which FAX-provisioned subscribers can retrieve FAX and obtain the status of FAX sent by them.

A subscriber sends a FAX from an ISU to a PSTN FAX machine by placing a FAX call to the destination FAX PSTN number. The call is routed to the FAX SFU at the destination Gateway for the PSTN number, which receives and stores the FAX. After receiving the FAX, the FAX SFU places a all to the PSTN number and transmits the FAX. If the PSTN FAX device cannot be reached, the FAX SFU will retry at least once. Once the FAX has been delivered or abandoned, the FAX SFU puts a status indication in the subscriber's mailbox, and, if the subscriber is so provisioned, sends a message to the subscriber.

A FAX is sent to a subscriber at an ISU by placing a FAX call to the subscriber's FAX number. The FAX call is terminated at the Gateway FAX SFU where the FAX is received and stored. The subscriber is notified of the received FAC either by message or by checking in with the FAX SFU automated attendant. Once notified, the subscriber then directs the FAX SFU to deliver the FAX either to his ISU or to some other number.

5.1.1.5 Call Release

Call release occurs when one of the connected parties goes on-hook or the network detects a call-terminating fault. In either case, the originator of the release generates a release message which transverses through all nodes involved in the call. A release acknowledgement is sent back through the network, each node drops the call and all resources being used for the call are released.

The Gateway generates billing records of the call and stores this information within the gateway. Billing records are later sent to the appropriate billing centers.

5.1.1.6 ISU to PSTN Calling

The Figure 5-6, below, shows the IRIDIUM resources used in ISU to PSTN voice calls.

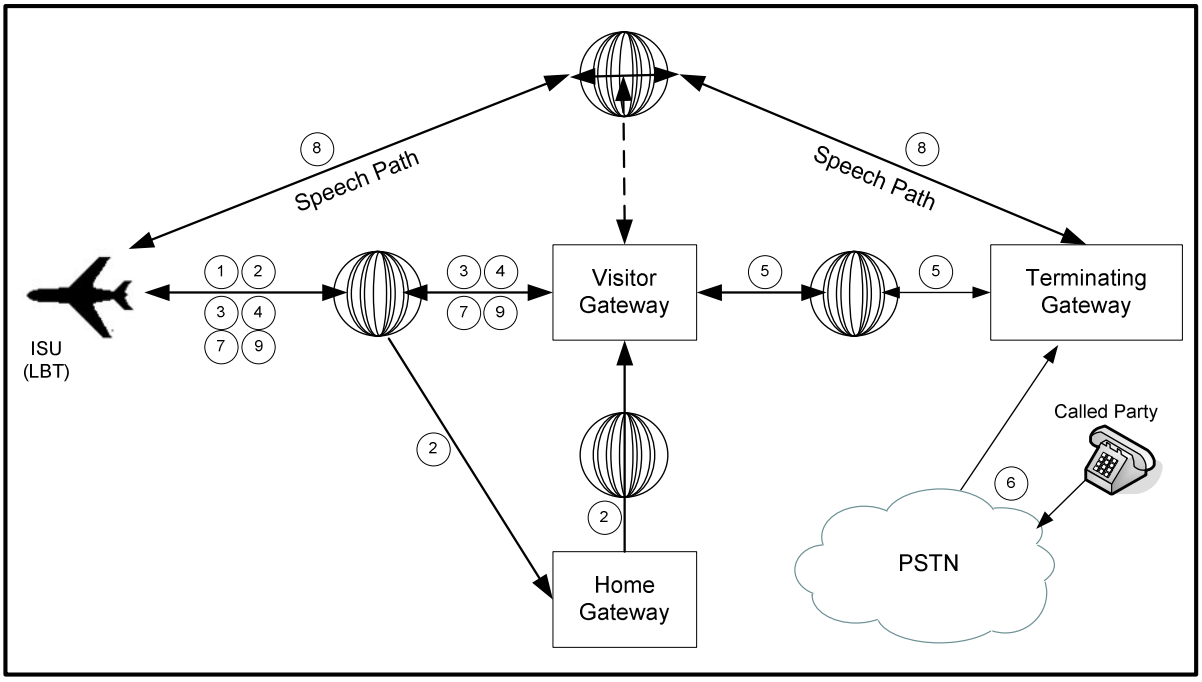

ISU to PSTN Voice Call

FIGURE 5-6

1. Acquisition – ISU_A establishes a communication link with an SV in the constellation.
2. Access Request - ISU_A sends Access Request to the HGW (ISU_A); Access is not denied by HGW(ISU_A) and sends Access Request to the VGW(ISU_A); VGW(ISU_A) grants access to ISU_A.
3. Service Request – ISU_A sends Services Request to VGW(ISU_A); VGW(ISU_A) performs Authentication.
4. Call Setup – ISU sends dialed number to the VGW to initiate the call and bearer capability (Speech, Data, FAX).
5. Resource allocation - VGW(ISU_A) performs digit analysis, determines the Terminating GW and selects an outgoing trunk for the call to proceed; then sends call the information to the Terminating GW.
6. The GW offers the call to the ISC for determination and connectivity to the appropriate PSTN resource to utilize for call connectivity.
7. Alerting - VGW(ISU_A) performs cut-through such that ISU_A that the called party is ringing.
8. Cut-through - VGW(ISU_A) performs cut-through such that ISU_A can send packets directly to the Terminating GW.
9. Answer - VGW(ISU_A) informs ISU_A that ISU_B has answered the call.

5.1.1.7 ISU to ISU Calling

The Figure 5-7, below, shows the IRIDIUM resources used in ISU to ISU voice calls.

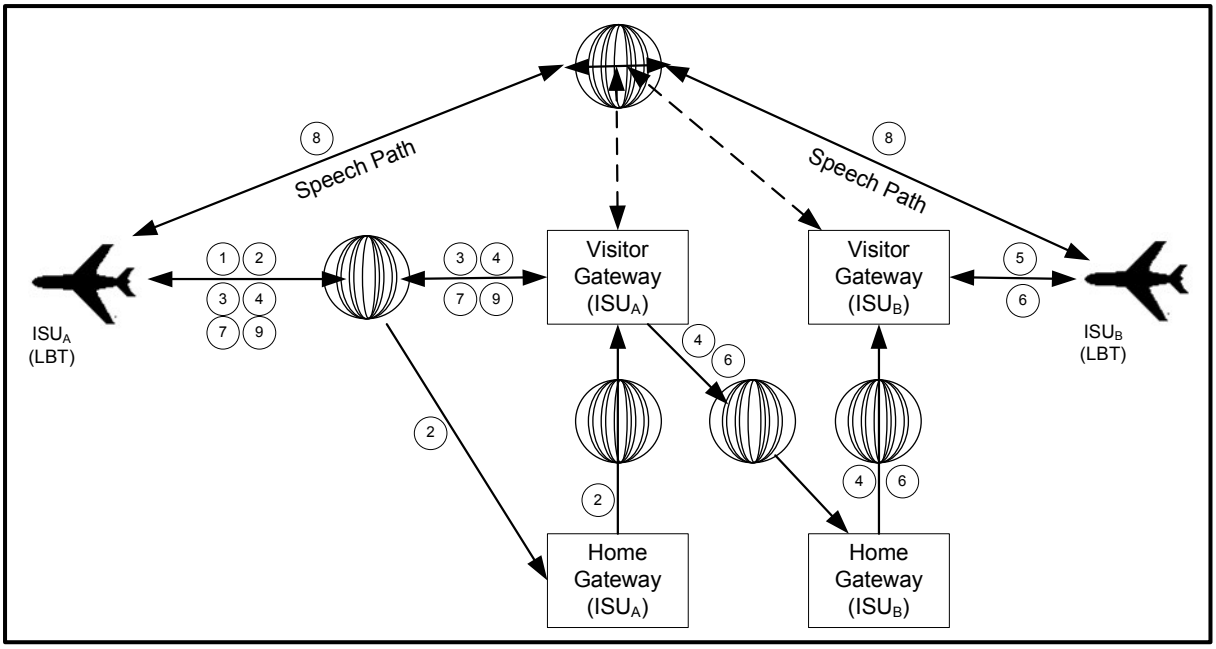

SU to ISU Voice Call

FIGURE 5-7

1. Acquisition – ISU_A established a communication link with an SV in the constellation.
2. Access Request – ISU_A sends Access Request to HGW(ISU_A); Access Request in so denied by the HGW(ISU_A) and sends the Access Request to the VGW(ISU_A); the VGW(ISU_A) grants access to ISU_A.
3. Service Request – ISU_A sends the Services Request to VGW(ISU_A); the VGW(ISU_A) performs Authentication.
4. Call setup – ISU sends dialed number to the VGW to initiate the call and bearer capability (Speech, FAX, Data).
5. Resource allocation - VGW(ISU_A) performs digit analysis, determines the ISU_B HGW(ISU_B) and selects an outgoing trunk for the call to proceed; then sends call information to HGW(ISU_B).
6. ISU Call Termination, as described earlier in this document.
7. Alerting - VGW(ISU_A) alerts ISU_A that ISU_B is ringing.
8. Cut-through - VGWs(ISU_A and ISU_B) perform cut-through such that ISU_A can send speech directly to ISU_B.
9. Answer - VGW(ISU_A) informs ISU_A that ISU_B has answered the call.

5.1.1.8 PSTN to ISU Calling (MTC)

The Figure 5-8, below, shows the IRIDIUM resources used in ISU to ISU voice calls.

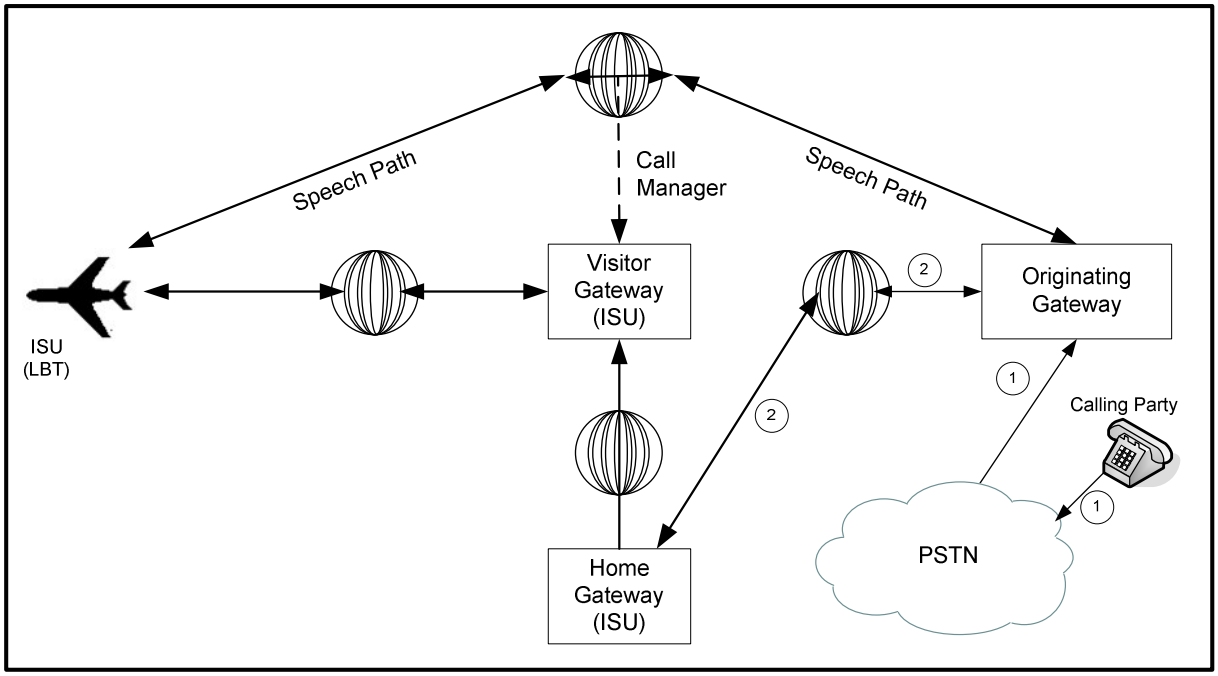

P

STN to ISU Voice Call

FIGURE 5-8

1. See PSTN Origination presented earlier in this document.
2. Originating GW interrogates, HGW (ISU_A) for radio capabilities, location and services authorized to ISU_A.
3. Once the ISC in the PSTN has delivered the call to the Originating Gateway, the call is processed the same as the ISU Termination presented earlier in this document.

5.1.2 Data Link

The IRIDIUM system supports two type of data service for aviation safety service, short burst data (SBD) and router UDI customer service (RUDICS). The 9522A LBT fully supports the use of both of these services. The 9601 LBT (modem) supports SBD only, with a few minor differences.

5.1.2.1 SBD

IRIDIUM's Short Burst Data Service (SBD) is a simple and efficient satellite network transport capability to transmit short data messages between field equipment and a centralized host computing system. A Mobile Originated (MO) SBD message can be between 1 and 1960 bytes. [Note that a zero (0) byte MO SBD message is referred to as a "Mailbox Check."] A Mobile Terminated (MT) SBD message can be between 1 and 1890 bytes.

The primary elements of the end to end SBD architecture are shown in Figure 5-9, below. Specifically, the elements consist of the Field Application (FA), the IRIDIUM Subscriber Unit (ISU), the IRIDIUM satellite constellation, the Earth Terminal Controller SBD Subsystem (ESS) located at the IRIDIUM gateway, the Internet, and the Vendor Application (VA).

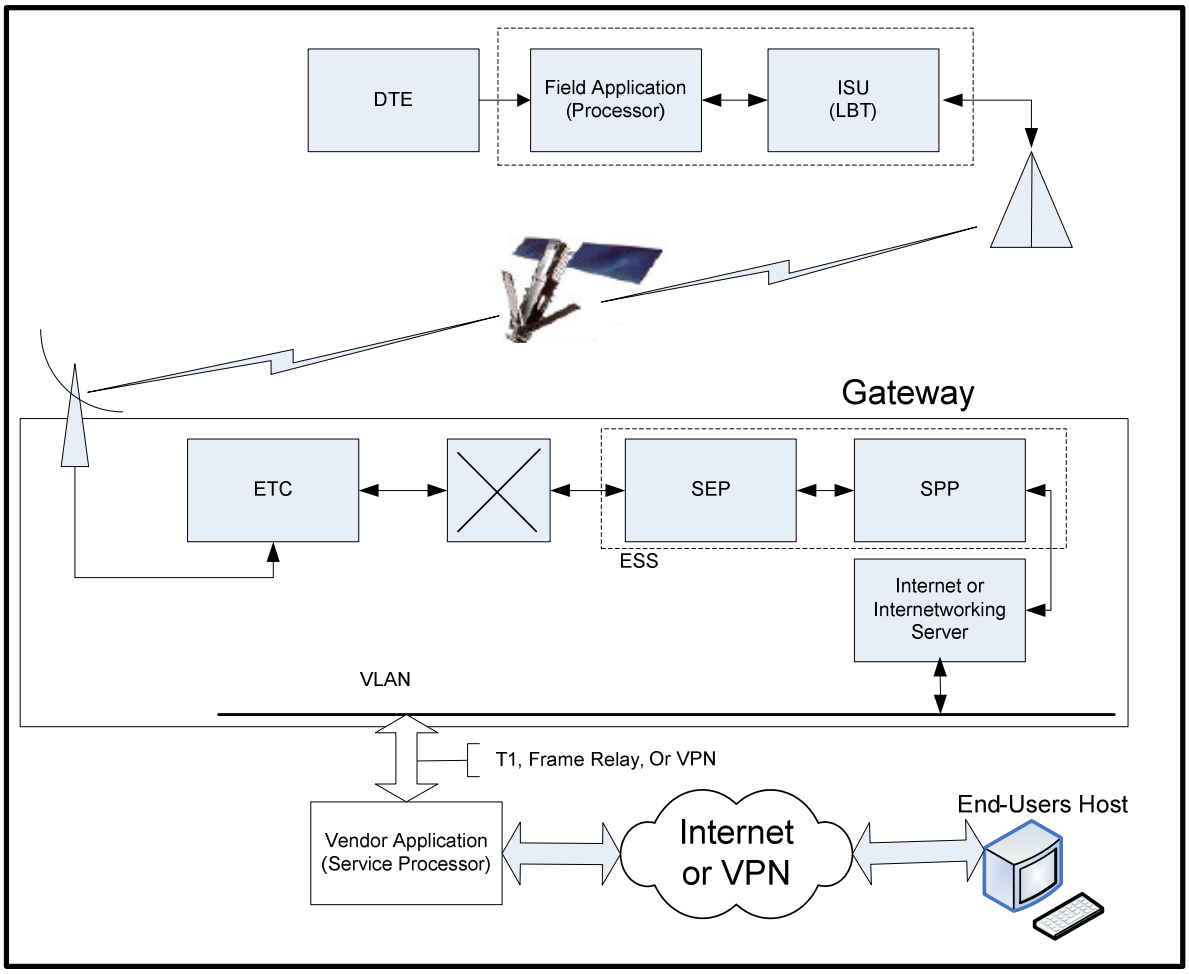

SBD Arhitecture

FIGURE 5-9

The Field Application represents the hardware and software that is configured by the VAR for specific applications such as collecting and transmitting GPS location information. The ISU is the IRIDIUM L-Band Transceiver (LBT) with the SBD feature available in firmware and the service activated on the IRIDIUM network. The ESS is responsible for storing and forwarding messages from the ISU to the Vendor Application and storing messages from the Vendor Application to forward to the ISU. The ISU communicates with the ESS via the IRIDIUM satellite constellation.

The interface between the Vendor Application and the ESS uses standard Internet protocols to send and receive messages. Mobile terminated messages are sent to the ESS using IP addreses, identifying the specific ISU by encoding the unique ISU IMEI in the subject line of the message. The data message itself is transported as a binary attachment to the message. Messages sent to the Vendor Application are delivered to a specific IP address that is configured when the IMEI is provisioned. The delivery address for each IMEI can be changed on-line by the VAR using the IRIDIUM SPNet provisioning tool. It is also possible for one ISU to send a message direct to another ISU without the message passing to the Vendor Application. The second ISU destination IMEI must be programmed on-line by the VAR using the IRIDIUM SPNet provisioning tool.

The interface between the FA and the ISU is a serial connection with extended proprietary AT commands. This interface is used to load and retrieve messages between the ISU and the Field Application.

For a Mobile Originated SBD Message (MO-SBD) the message is loaded into the MO buffer in the ISU using the +SBDWB or +SBDWT AT Commands, a message transfer session between the ISU and the ESS is initiated using the AT Command +SBDI. For a Mobile Terminated SBD Message (MT-SBD) the ISU initiates a Mailbox Check using the AT Command +SBDI and when the message is received from the ESS it can be retrieved from the MT buffer in the ISU by the Field Application using the +SBDRB or +SBDRT AT Commands.

Messages are transferred between the ISU and the ESS using a reliable transport mechanism that ensures the message is delivered error free. If the ISU was not able to send or receive messages, an indication is passed to the FA via the serial interface.

The MO and MT message buffers in the ISU will maintain messages as long as the ISU is powered on. Once a message is transferred from the FA to the MO buffer in the ISU, it will remain there even after it is successfully sent to the ESS. If a MT message is received at the ISU from the ESS, it will remain in the MT buffer even after the FA reads it. The buffers in the ISU will be cleared only when either given an explicit command (+SBDD) or when the ISU is power cycled or is overwritten with new data. The MT buffer will be cleared when a SBD session is initiated with the +SBDI command.

All safety services MO and MT messages between the VA and the ESS utilize a Virtual Private Network (VPN) and leased line routing of messages to provide additional security, capacity and/or redundancy. Additionally ISU-ISU SBD messages remain entirely within the IRIDIUM network infrastructure, which provides a high level of security.

5.1.2.2 RUDICS

IRIDIUM's RUDICS is a circuit switched data service designed to be incorporated into an integrated data solution. Integrated data solutions are applications such as remote asset monitoring, control, and data file transfer. Often these applications are designed to support hundreds or thousands of remote units. RUDICS is designed to take advantage of the global nature of the IRIDIUM communications system and combine that with a modern digital connection between the IRIDIUM Gateway and the Value Added Resellers centralized application server or Host Application.

RUDICS provides a circuit switched data service, a data pipe, by which to transmit and receive customer data. The service can be configured on a customer basis for PPP or MLPP depending on application or customer's request. The customer must be properly provisioned in both the SSS and the RUDICS ACS (access control server) in order to use this service.

Access is provided from the IRIDIUM network to the Internet or dedicated circuits (or visa versa).

Service can be configured to limit access to user group functionality whereby only those configured for a particular destination will be able to reach that destination.

The primary elements of the end to end RUDICS architecture are shown in the Figure 5-10, below. Specifically, the elements consist of the Field Application (FA), the IRIDIUM Subscriber Unit (ISU), the IRIDIUM satellite constellation, the standard telephony units and the RUDICS

server located at the IRIDIUM gateway, the VPN, and the Vendor Application (VA).

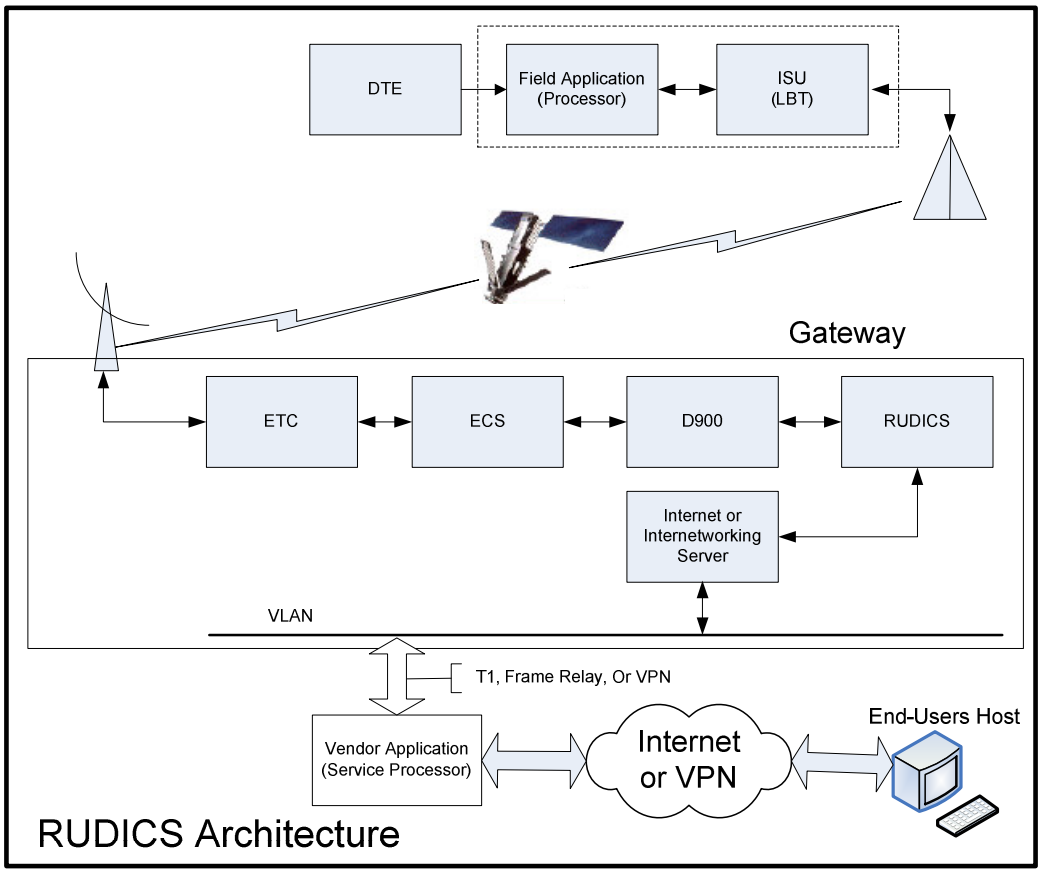

RUDICS Architecture

FIGURE 5-10

The standard sequence of events for a mobile originated call:

1. Mobile application places call to a custom RUDICS Server Number
2. Call request is routed over the constellation for user authentication and call set-up.
3. Switch connects to RUDICS Server, secondary authentication conducted
4. RUDICS Server terminates call to pre-configured IP Address
5. End-to-End IP connection established, over the constellation, between the Host Application and Mobile Application.

The Mobil Originated RUDICS Call Progression is shown in Figure 5-11.

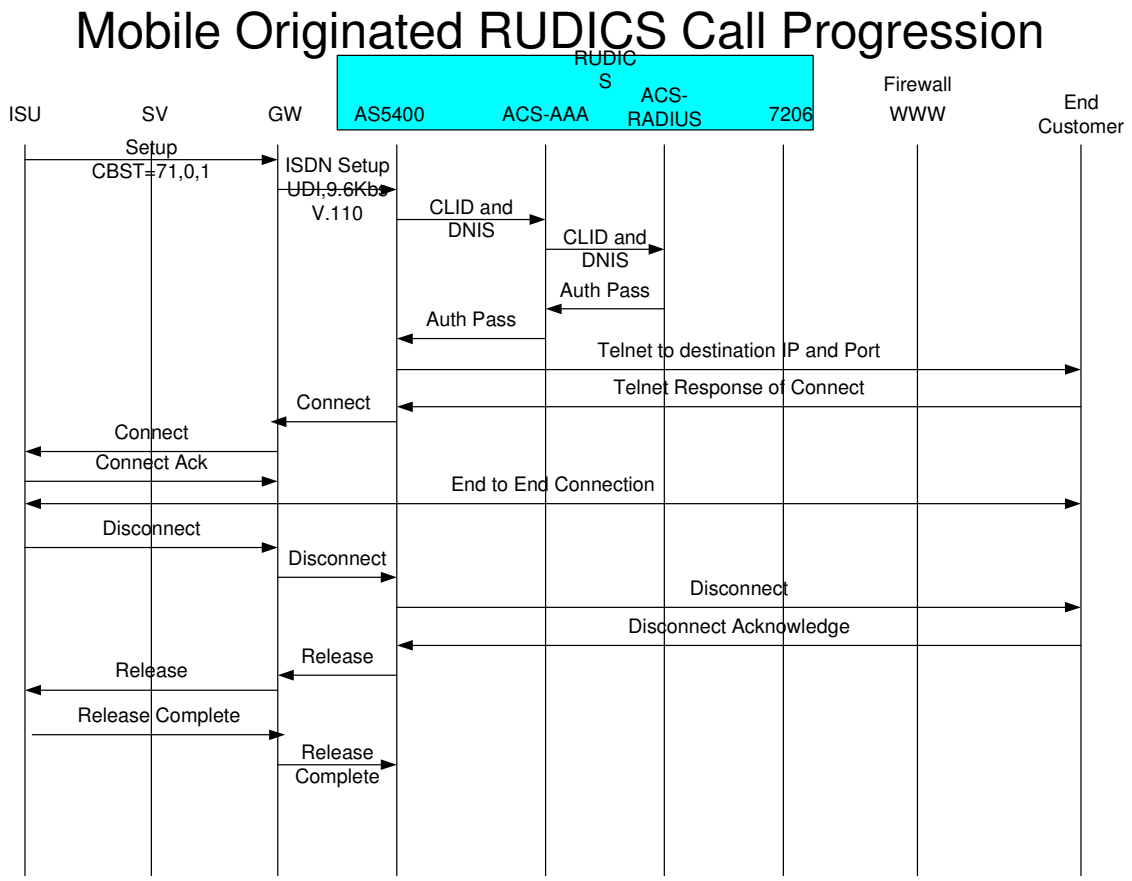

FIGURE 5-11

The standard sequence of events for a mobile terminated call:

1. Host application places telnet call to RUDICS Server
2. RUDICS Server Authenticates Host
3. Call request is routed to the switch for call set-up
4. Call request is routed over the constellation for user authentication and call set-up.
5. Mobile Application answers call. End-to-End IP connection established, over the constellation, between the Host Application and Mobile Application.

The Mobil Terminate RUDICS Call Progression is shown in Figure 5-12.

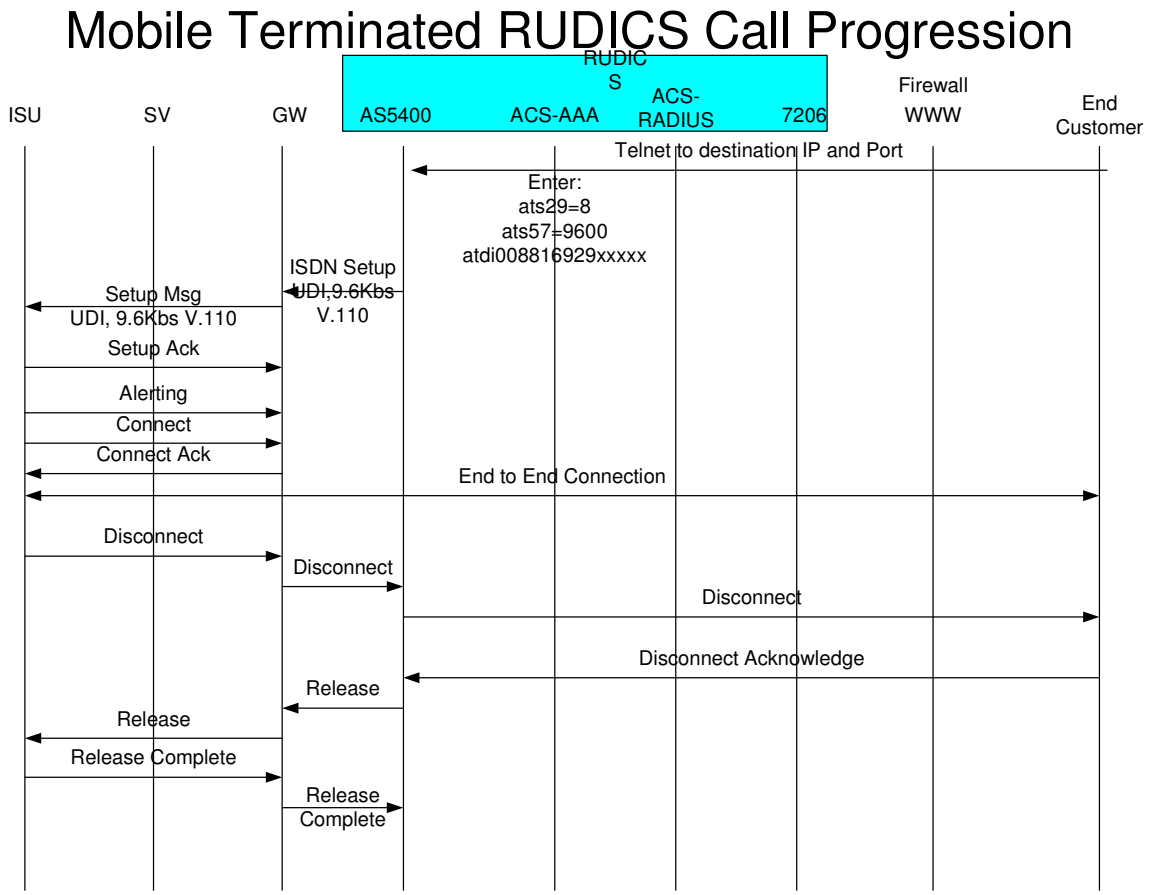

FIGURE 5-12

RUDICS uses routers to allow termination and origination of circuit switched data calls to and from a specific IP address via a Telnet protocol. The capability is designed to support applications that have many field devices and one central host application. The service allows field devices to directly call the host application and the host application is able to directly call the field devices. Connectivity between the IRIDIUM Gateway and the Host Application can be by a variety of methods, including Internet, Virtual Private Network and Leased Line. Aviation safety services may only utilize approved VPN connectivity and leased lines, in a redundant fashion.

6. Operations

6.1 Performance

Due to the complexity of the IRIDIUM system, the task of calculating a theoretical mathematical model of the service availability would be extremely complex and somewhat miss-leading. However, in an effort to gain a true understanding of the service availability a project was undertaken to put in place to measure and record the service availability. A number of devices, which are referred to as Auto-Dialers, were deployed around the world. These devices, which when configured and set up properly, would automatically place calls through the IRIDIUM network. As each call is dialed, the system starts a timer, as the call process proceeds and the call is established the connection time is stopped and the total time to connect is recorded. The calls are set to last approx 45 seconds. If the call is dropped prematurely, the premature call is recorded, as well the recording of properly terminated calls.

IRIDIUM has set up approximately 25 Auto-Dialers around the world, in both the northern and southern hemispheres. Each Auto-Dialer is connected to a computer that runs a script to place calls through the system and records the results. Each day, each Auto-dialer attempts over 1440 calls, 365 days a year (366 during Leap years), which has continued since 1998 which equates to 525600 calls per auto-dialer per year, or well over 10 millions calls attempted each year using the 25 auto-dialers.

6.2 System Availability (based on MASPS, DO-270)

6.2.1 Derivation and Calculations

6.2.2 KPI's

IRIDIUM has collected a considerable amount of data on the system performance. Service reports are generated daily, weekly, and monthly by the support staff. The performance report measures all of the services offered by Iridium. The intent is to measure services at a high level to identify systemic problems. Each service platform has several basic measurands to quantify the stages of a call or messaging attempt. The metrics are divided by elements such as gateway, service platform, and intra or inter gateway.

The following key performance indicators are monitored closely,

- Call Set up
- Call Establishment Rates
- Drop Rates – 45, 180, and 600 sec Calls
- Drop Rate vs. Call Duration

6.3 System Outages and Maintenance

6.3.1 Planned Outages

IRIDIUM has established a permanently scheduled maintenance window [Window] for the facilities at the Gateway in Tempe, AZ every Wednesday between 15:00 and 19:00 MST. [22:00 GMT Wednesday to 02:00 GMT Thursday.]

If IRIDIUM intends to utilize the Window, IRIDIUM will endeavor to send an email notification to IRIDIUM VARs by close of business MST on the Tuesday immediately prior to the Window. A corresponding email notification will be sent once the maintenance has been completed.

If IRIDIUM does not intend to utilize the Window, no notification will be sent

IRIDIUM will always attempt to minimize the duration of the actual outage:

Depending on the nature of the maintenance, service may be completely unavailable for the entire maintenance window or for varying periods of time within the Window.

Depending on the nature of the maintenance, Mobile Originated Messages may be stored in the Gateway resulting in increased latency during this period.

IRIDIUM resellers providing aviation safety services are required to coordinate maintenance activities to coincide with IRIDIUM's maintenance window and to provide notification to end-users.

6.4 Unplanned Outages

In the event of an unplanned outage affecting service, IRIDIUM will endeavor to send an email notification to VARs once it has been determined that the outage has caused a problem for 10 minutes or longer.

IRIDIUM will not notify VARs of outages that were determined to be under 10 minutes.

Depending on the nature of the outage, the initial notification email may contain the following:

- Approximate start time of the outage
- End time of the outage

Note that even though IRIDIUM may have provided notification that the outage is over, the end-user may experience delays in receiving messages due to the clearing of the data queue(s).

6.5 Notifications

Notifications will only be provided to companies which have a fully executed Value Added Reseller Agreement with IRIDIUM. IRIDIUM does not supply notifications to third parties.

Figure 6-2, Planned Maintenance Notification, is a sample of a planned maintenance notification.

From: tier 2 support
Sent: Wednesday, January 18, 2006 11:07 AM
To: tier 2 support
Cc: Global Alliance Manager; Iridium Support Center; BD Channel Lead Mgmt; Data Support
Subject: System Advisory - Maintenance

Importance: High

Service Impact: SPNet and Prepaid Platform Activations/Modifications

Begin Date: January 19th, 2006
Begin Time: 00:00 (GMT)

End Date: January 19th, 2006
End Time: 04:00 (GMT)

Comments: We will be performing a system maintenance during the above timeframe. SP's will not have the ability to access SPNet during this maintenance period. Due to SPNet being unavailable, provisioning new accounts in the Prepaid Platform will not be possible.

There will be no advisory update sent when the maintenance is completed.

We apologize for any inconvenience this may cause. Should you have any questions, please contact us at 1.480.752.5100.

Thank you,

Tier 2 Support
Iridium Satellite, LLC.
8440 South River Parkway
Tempe, AZ 85284
(480) 752-5100

Planned Maintenance Notification

Figure 6-1

Figure 6-2, Service Outage and Restoration Notification**,** is a sample of a service disruption message, which is usually issued during unplanned outages lasting less than 10 minutes. These types of messages provide the start and end times of the outage and type of service affected.

From: Data Support
Sent: Tuesday, December 20, 2005 3:28 PM
To: Data Support
Cc: Global Alliance Manager; Iridium Support Center; BD_Channel_Lead Mgmt;

Subject: SBD Advisory

Importance: High

Service Impact: Short Burst Data

Begin Date: December 20, 2005
Begin Time: 20:46 (GMT)

End Date: December 20, 2005
End Time: 21:28 (GMT)

Comments: SBD was down during the above timeframe. Service has now been restored.

We apologize for any inconvenience this may have caused. Should you have any questions, please contact us at 1.480.752.5100.

Thank you,

Data Support
Iridium Satellite, LLC.
8440 South River Parkway
Tempe, AZ 85284
(480) 752-5100

Service Outage and Restoration Notification

Figure 6-2

Figure 6-3, Unplanned Outage Notification**,** is an unplanned outage notification, which is normally issued for outage over 10 minutes in duration.

From: Data Support
Sent: Tuesday, December 20, 2005 4:42 PM
To: Data Support
Cc: Global Alliance Manager; Iridium Support Center; BD_Channel_Lead Mgmt;

Subject: SBD Advisory

Importance: High

Service Impact: Short Burst Data (Mobile Originated and Terminated)

Begin Date: December 20 2005
Begin Time: 22:26 (GMT)

End Date: December 20 2005
End Time: TBD (GMT)

Comments: SBD is currently unavailable. We will advise you once the service is restored.

We apologize for any inconvenience this may cause. Should you have any questions, please contact us at 1.480.752.5100.

Thank you,

Data Support
Iridium Satellite, LLC.
8440 South River Parkway
Tempe, AZ 85284
(480) 752-5100

Unplanned Outage Notification

Figure 6-3

Figure 6-4, Service Restoration Notification**,** is a service restoration notification which is usually issued upon restoration of service where the outage lasted longer than 10 minutes.

From: Data Support
Sent: Tuesday, December 20, 2005 6:11 PM
To: Data Support
Cc: Global Alliance Manager; Iridium Support Center; BD_Channel_Lead Mgmt;

Subject: SBD Advisory

Importance: High

Service Impact: Short Burst Data

Begin Date: December 20, 2005
Begin Time: 20:46 (GMT)

End Date: December 20, 2005
End Time: 23:55 (GMT)

Comments: SBD Mobile Originated and Mobile Terminated has been restored. Any Messages that have not been delivered or received as of the restore time will need to be resent.

We apologize for any inconvenience this may cause. Should you have any questions, please contact us at 1.480.752.5100.

Thank you,

Data Support
Iridium Satellite, LLC.
8440 South River Parkway
Tempe, AZ 85284
(480) 752-5100

Service Restoration Notification

Figure 6-4

6.6 Reporting an Outage

When an end-user suspects a problem with the normal service operation that had been operating normally (i.e. not development or test units), they are required to contact their contracted aviation safety services provider to initiate troubleshooting procedures to identify the specific cause of the problem. If the troubleshooting procedures indicate the problem may be attributed to the IRIDIUM network then the service provider contacts IRIDIUM Tier 2 Support with specific details of the problem.

6.7 Trouble Ticket Management Process

When the service provider is unable to resolve the end-users' issues, they will contact the IRIDIUM's Tier 2 Support line to report the issue for assistance and/or follow up activities. IRIDIUM utilizes two trouble ticket tracking systems, HEAT and MTTS.

The HEAT system is used to record all calls received from service providers, regardless of any follow up activity required. This system is used to record and track the types of calls received by the Tier 2 support center to trend the levels of support required and to determine if additional

training is required for a service provider.

The MTTS is used to record actual problems that required follow up activity by IRIDIUM. When tickets are opened in MTTS, they are linked to the respective HEAT ticket.

Figure 6-5, Trouble Ticket Management Process, below illustrates the process flow for the issuance, follow up activity and closure of trouble tickets.

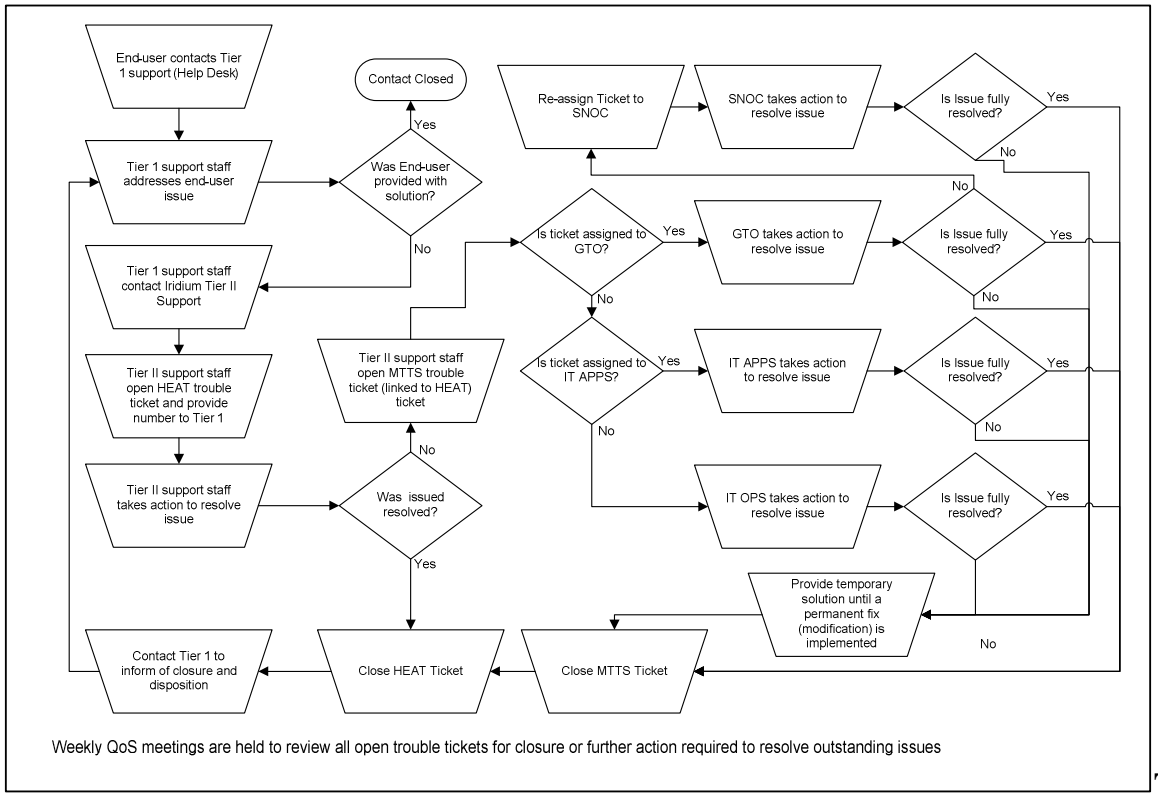

Troubl

e Ticket Management Process

FIGURE 6-5

6.7.1.1 Back-Up Handling

6.7.2 Unscheduled Maintenance

6.7.2.1 Detection Process

6.7.2.1.1 Error Handling

The aviation safety services SP is the initial contact point for service issues. In the event the customer issue cannot be resolved by the SP customer care, the SP customer care shall contact the IRIDIUM Tier II for follow up activity, as shown in Figure 6-5, Trouble Ticket Management Process. IRIDIUM has in place the expertise required to fully investigate service anomalies to resolution, which, if requires, includes system modifications.

6.7.2.1.2 Notification

The aviation safety services SP is the initial contact point for service issues. The safety services SP is responsible for notification of the end-users of any outages or planned maintenance activities. Notifications are usually broadcasted eMail messages to the End-user's designated point(s) of contact. In the event of an unplanned activity, the SP customer care may contact the end-user directly via phone, or fax.

6.7.2.1.3 Escalation

The aviation safety services SP is the initial contact point for service issues. In the event the customer issue cannot be resolved by the SP customer care, the SP customer care shall contact the IRIDIUM Tier II for follow up activity, as shown in Figure 6-5, Trouble Ticket Management Process. In the event the issue requires escalation, IRIDIUM has in place an escalation process, which provides for escalation for every 30 minutes the request for service goes unacknowledged by IRIDIUM customer care, up to the Vice President of Gateway Operations.

6.7.2.1.4 Corrections

6.7.2.1.5 Priorities

The aviation safety services SP is the initial contact point for service issues. In the event the customer issue cannot be resolved by the SP customer care, the SP customer care shall contact the IRIDIUM Tier II for follow up activity, as shown in Figure 6-5, Trouble Ticket Management Process. IRIDIUM has in place the expertise required to fully investigate service anomalies to resolution, which, if requires, includes system modifications. The trouble ticket system does include placement of prioritization of service issues. If a system modification is required, IRIDIUM has in place change control processes which allow for upper management's assessment of the need to place a priority on such modification based on the severity and/or magnitude of the service impact.

7. Avionics

The IRIDIUM based avionics are based on the Iridium supplied LBT, one voice/data channel for each LBT, as shown in Figure 7-1, Two Channel Avionics Block Diagram. The LBT provides, as a minimum, the following:

- Seamless, low latency link with the Iridium Network
- Vocoder, to insure a consistent quality
- Data linkage with the SBD and RUDICS processors at the Gateway to ease integration and insure seamless service
- SIM card, to assure that safety-related aeronautical services obtain timely access to the resources needed within the Iridium AMS(R)S, which includes provision for Priority, Precedence and Preemption (PPP) of system resources
- Sub-miniature D connector for interfacing with the avionics interworkings
- AT Command structure to control the LBT

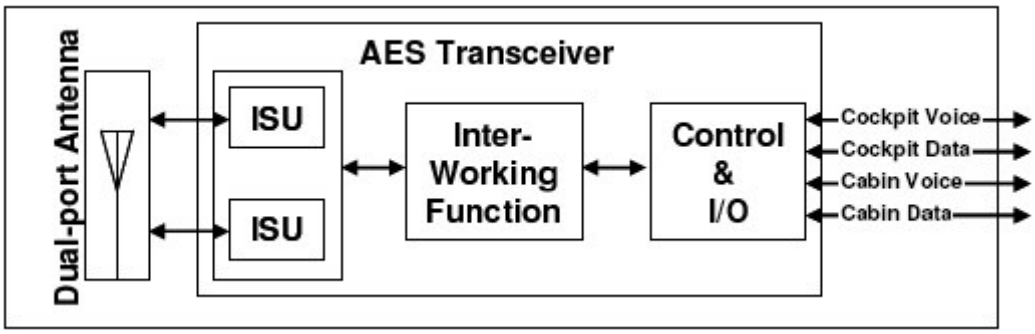

Two Channel Avionics Block Diagram

FIGURE 7-1

All avionics equipped with the special aviation safety services SIM card shall subscribe to the interface control document established specifically for safety services. The ICD shall be published and maintained by the IRIDIUM approved safety services providers to assure proper interaction through the IRIRIUM network and adherence to published communications protocols, such as ARINC 622, ATS Data Link Applications Over ACARS Air-Ground Network and ARINC 623, Character-Oriented Air Traffic Service (ATS) Applications.

7.1 Requirements Definition

All avionics are subject to the airworthiness regulations that apply to the aircraft to which the avionics are to be installed upon, such as FAR, part 121, Operating Requirements; Domestic, Flag, and Supplemental Operations, which requires adherence to FAR part 25, Airworthiness Standards: Transport Category Airplanes, for safe flight which reference DO-160, Environmental Conditions and Test Procedures for Airborne Equipment. Adherence to these requirements are provided by the avionics manufacturer and the installation entity providing the engineering and certification of the installation engineering and certification package required for a Type

Certificate (TC), for a new aircraft, or a Supplemental Type Certificate (STC) for modification of an aircraft.

Several relevant documents should be consulted for the Iridium System and the LBT in additional to these technical specifications.

- ICAO Core AMS(R)S SARPS for core specification of NGSS supporting AMS(R)S;
- RTCA DO-262, Minimum Operational Performance Standards for Avionics Supporting Next Generation Satellite Systems (NGSS), for minimum performance standard of NGSS AMS(R)S;
- RTCA DO-270, Minimum Aviation System Performance Standards (MASPS) for the Aeronautical Mobile-Satellite (R) Service (AMS(R)S) as Used in Aeronautical Data Links, for requirement and specification for the data link;
- RTCA DO-215A Guidance on Aeronautical Mobile Satellite Service (AMSS) End-to-End System Performance
- RTCA DO-231 for Design Guidelines and Recommended Standards for the Implementation and Use of AMS(R)S Voice Services in a Data Link Environment

7.2 Aircraft Installation Guidelines

Radio Rack, or equivalent rack, as permitted based on the DO-160, Environmental Conditions and Test Procedures for Airborne Equipment, qualified installation category

7.3 Aircraft Antenna Characteristics

Mounting Guidelines – the antenna(s) should be mounted on the top of the fuselage as close to the centerline as possible, with maximum clearance from any potential signal obstructions, such as the vertical stabilizer. If an Inmarsat system has been installed on the aircraft, then the Iridium system antenna should be installed at the maximum distance from the Inmarsat system antenna, keeping in mind a clear signal path.

Refer to ARINC 761, Second Generation Aviation Satellite Communication System, Aircraft Installation Provisions, specifications for additional requirements.

Frequency Masking - The AES antenna system shall cover the frequency band of 1616-1626.5 MHz.

7.4 Qualification-Network

IRIDIUM utilizes a number of service providers and value-added resellers to provide the services that extend beyond the IRIDIUM network. IRIDIUM'S aviation safety services SP shall be selected on the basis of their knowledge and familiarity with the aviation industry, aviation communications and their demonstrated successful history of selling and supporting voice and data services. The aviation safety services SP's shall be selected based on a number of qualification factors, such as:

1) Technical capabilities
2) Physical Assets
3) Financial Viability
4) Customer Care capabilities

5) Product Support infrastructure

The high level timeline for an aviation safety services SP shall be as follows:

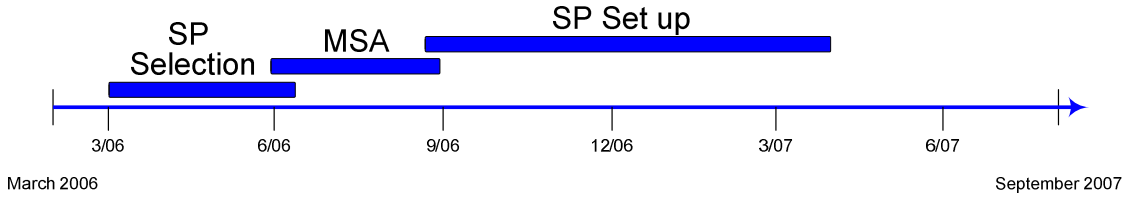

Aviation Safety Service SP Implementation High Level Timeline

Figure 7-2

7.4.1 Technical capabilities

The aviation safety services SP(s) shall exhibit high technical capabilities, as a minimum:

- Engineering design, test and integration of aircraft systems, avionics, aviation centric networks, such as SITA and ARINC, and air transport industry standards and specifications
- Satellite communications system engineering
- Aviation centric process and data system engineering
- Wide Area Networking expertise
- Established application specific expertise relating to the aviation communications systems
- Established technical capabilities in PC server, database, application software development, deployment and maintenance
- Established support of air transport industry working groups

7.4.2 Physical Assets

The aviation safety services SP(s) shall maintain adequate physical assets which shall include, as a minimum:

- Dedicated data center in operation for a minimum of two years, which shall include a customer care facility, training classroom, and a logistics area for handling of avionics and network support hardware.
- Dedicated laboratory for product development and avionics testing and qualification

7.4.3 Financial Viability

The aviation safety services SP(s) shall be able to demonstrate their financial viability with a business plan that demonstrates their ability to maintain their financial health while the business is in the development cycle.

- A business plan that demonstrates their understanding of the aviation safety services
- An implementation plan that identifies the Internal or Outsourced resources required to fulfill the business plan
- Company must have financing for current business plan for, as a minimum, the next two years

7.4.4 Customer Care Capabilities

The aviation safety services SP(s) shall be able to plan to implement a fully staffed and trained customer care service which shall be in place within 6 months of being approved to provide safety services which shall include, as a minimum:

- Hours of operation to be appropriate business hours for the aviation industry and air traffic services, but in no event less than 40 hours per week
- Separate number into customer care, with voicemail account
- Ability to answer: general inquiries, billing inquiries, general inquiries regarding Iridium Data Services, service/contract changes
- Ability to provide technical and general troubleshooting for all commercially offered Iridium Data Services
- Iridium products for use by customer support personnel to perform troubleshooting functions
- Customer support personnel have access to SPNet for account status information
- Provide 24X7 Customer support for voice and data services

7.4.5 Product Support Infrastructure

The aviation safety services SP(s) shall be able to plan to implement a fully staffed and product support infrastructure which shall be in place within 6 months of being approved to provide safety services which shall include, as a minimum,

- Responsible for attending Iridium's training and train own internal personnel
- Ability and program to train end-users
- Responsible for product logistics, such as distribution and tracking of SIM cards and avionics in support of end-users
- Internet Access / Connectivity and Iridium Extranet Access and product support web site

8. IRIDIUM Ground Based Services

9. Process for Implementing Future Services

10. Appendices to include Integration Control Documents