International Civil Aviation Organization | Organisation de l'aviation civile internationale | Organización de Aviación Civil Internacional | Международная организация гражданской авиации | منظمة الطيران المدني الدولي | 国际民用航空组织

Tel.: +1 514-954-8219 ext. 6717

Ref.: AN 4/1.1.55-15/30 29 May 2015

**Subject:** Proposals for the amendment of Annexes 3; 6, Parts I and II; 8; 14, Volume I; 15; PANS-Aerodromes; and PANS-ATM relating to the use of an enhanced global reporting format for assessing and reporting runway surface conditions

**Action required:** Comments to reach Montréal by 28 August 2015

Sir/Madam,

1. I have the honour to inform you that the Air Navigation Commission, at the seventh meeting of its 198th Session held on 5 March 2015, considered the proposals developed by the Friction Task Force of the Aerodrome Design and Operations Panel (ADOP) to amend the Standards and Recommended Practices (SARPs) in Annex 14 — *Aerodromes*, Volume I — *Aerodrome Design and Operations*; the *Procedures for Air Navigation Services (PANS) — Aerodromes* (PANS-Aerodromes, Doc 9981); Annex 3 — *Meteorological Service for International Air Navigation*; Annex 6 — *Operation of Aircraft*, Part I — *International Commercial Air Transport — Aeroplanes* and Part II — *International General Aviation — Aeroplanes*; Annex 8 — *Airworthiness of Aircraft*; Annex 15 — *Aeronautical Information Services*; and the *Procedures for Air Navigation Services — Air Traffic Management* (PANS-ATM, Doc 4444) relating to improvements in assessing and reporting runway surface conditions. The Commission authorized the transmission of these proposals to Contracting States and appropriate international organizations for comments.

2. To further assist you in the review of the proposed SARPs and PANS in this respect, the aforementioned proposals to Annex 14, Volume I; the PANS-Aerodromes; Annexes 3; 6, Parts I and II; 8; 15; and the PANS-ATM are explained in more detail in Attachment A. The provisions in Annex 14, Volume I and the PANS-Aerodromes provide the lead material and, accordingly, have been listed ahead of other Annexes/PANS amendments. The proposed amendment to Annex 14, Volume I; the PANS-Aerodromes; Annexes 3; 6, Parts I and II; 8; 15; and the PANS-ATM are contained in Attachments B, C, D, E, F, G, H and I, respectively. A rationale box providing more information has been included immediately following the proposals throughout the attachments.

999 Robert-Bourassa Boulevard
Montréal, Quebec
Canada H3C 5H7
Tel.: +1 514-954-8219
Fax: +1 514-954-6077
Email: icaohq@icao.int
www.icao.int

3. In examining the proposed amendments, you should not feel obliged to comment on editorial aspects as such matters will be addressed by the Air Navigation Commission during its final review of the draft amendments.

4. May I request that any comments you may wish to make on the proposed amendments to Annex 14, Volume I; the PANS-Aerodromes; Annexes 3; 6, Parts I and II; 8; 15; and the PANS-ATM be dispatched to reach me not later than 28 August 2015. The Air Navigation Commission has asked me to specifically indicate that comments received after the due date may not be considered by the Commission and the Council. In this connection, should you anticipate a delay in the receipt of your reply, please let me know in advance of the due date.

5. In addition, the proposed amendments to Annex 14, Volume I; the PANS-Aerodromes; Annexes 3; 6, Parts I and II; 8; 15; and the PANS-ATM are envisaged for applicability on 8 November 2018. Any comments you may have thereon would be appreciated.

6. The subsequent work of the Air Navigation Commission and the Council would be greatly facilitated by specific statements on the acceptability or otherwise of the amendment proposals.

7. Please note that, for the review of your comments by the Air Navigation Commission and the Council, replies are normally classified as “agreement with or without comments”, “disagreement with or without comments”, or “no indication of position”. If in your reply the expressions “no objections” or “no comments” are used, they will be taken to mean “agreement without comment” and “no indication of position”, respectively. In order to facilitate proper classification of your response, a form has been included in Attachment J which may be completed and returned together with your comments, if any, on the proposals in Attachments B to I.

Accept, Sir/Madam, the assurances of my highest consideration.

Raymond Benjamin
Secretary General

**Enclosures:**

A — Background
B — Proposed amendment to Annex 14, Volume I
C — Proposed amendment to the PANS-Aerodromes (Doc 9981)
D — Proposed amendment to Annex 3
E — Proposed amendment to Annex 6, Part I
F — Proposed amendment to Annex 6, Part II
G — Proposed amendment to Annex 8
H — Proposed amendment to Annex 15
I — Proposed amendment to the PANS-ATM (Doc 4444)
J — Response form

**ATTACHMENT A** to State letter AN 4/1.1.55-15/30

# BACKGROUND INFORMATION ON THE PROPOSAL FOR AN ENHANCED GLOBAL REPORTING FORMAT FOR RUNWAY SURFACE CONDITION ASSESSMENT AND REPORTING

## 1. GENERAL

1.1 Runway surface conditions have contributed to many safety events and investigations have revealed shortfalls in the accuracy and timeliness of assessment and reporting methods currently provided for in ICAO provisions and guidance material.

1.2 A report of the Flight Safety Foundation entitled "The Runway Safety Initiative – Reducing the Risk of Runway Excursions" (May 2009) cited ineffective braking due to runway contamination as the third most common landing excursion risk factor.

1.3 The second edition of the *IATA/ICAO Runway Excursion Risk Reduction (RERR) Toolkit* (May 2011) reported that "out of 164 total runway excursion accidents, 62 (38 per cent) reported some type of runway contamination".

1.4 A globally-harmonized methodology for runway surface condition assessment and reporting is required to provide reports that are directly related to the performance of aeroplanes. The methodology includes the potential to communicate actual runway surface conditions to flight crew in real time and in terms that directly relate to aeroplane performance data.

1.5 The Friction Task Force (FTF) of the Aerodrome Operations and Design Panel (ADOP) had developed an improved global runway condition assessment and reporting format based on the Take-off and Landing Performance Assessment (TALPA) – Aviation Rulemaking Committee (ARC) project initiated in the United States. The methodology, intended for global application, relies on the following:

a) an agreed set of criteria used in a consistent manner for runway surface condition assessment, aeroplane (performance) certification and operational performance calculation;

b) a unique runway condition code (RWYCC) linking the agreed set of criteria with the aeroplane landing and take-off performance table, and related to the braking action experienced and eventually reported by flight crews; and

c) a standardized common terminology for runway surface condition description reported by the aerodrome operator's runway assessors, air traffic controllers and aeronautical information services for the use of aircraft operators, noticeably the flight crew.

1.6 The methodology is premised on the following principles:

a) assessing and reporting, by means of a uniform runway condition report (RCR), the runway surface conditions, including contaminants, for each third of the runway length by trained runway assessors. These contaminants are:

i) categorized based on their effect on aeroplane braking performance; and

ii) coded in a matrix which will be used by aircraft manufacturers to determine the appropriate data to provide to aircraft operators and flight crew and how to calculate aeroplane performance for specific runway surface conditions. The key documentation in this respect is the approved data and guidance material provided by the aircraft manufacturers for the safe operation of the aeroplane on dry, wet and contaminated runway surfaces.

b) air traffic services (ATS) provide the information received via the RCR to end users through voice communication, controller-pilot data link communication (CPDLC), voice ATIS and DIGITAL ATIS. The information is presented by ATS to flight crew in the direction of aircraft operation with the first runway third being the one nearest to the aircraft;

c) aeronautical information services (AIS) provide the information received in the RCR to end users by an improved SNOWTAM. The information is presented as reported and always as observed from the lowest runway designation number; and

d) aircraft operators utilize the information in conjunction with the performance data provided by the aircraft manufacturer to determine, along with other information such as, but not limited to, weather conditions and the weight of the aeroplane, if landing or take-off operations can be conducted safely.

1.7 The amendment proposal to **Annex 14, Volume I** sets out the provisions for the introduction of, inter alia, the RCR, RWYCC and the descriptors for assessing and reporting the runway surface condition. The amendment in this Annex forms the basis for the dissemination of information in Annex 15 and the PANS-ATM.

1.8 The amendment proposal in the **PANS-Aerodromes** contains globally-harmonized procedures complementing the high level requirements in Annex 14, Volume I. These procedures provide detailed guidance on the concept, objectives and content of the RCR; how to assess a runway surface condition and assigning a RWYCC including procedures for the downgrading or upgrading of the codes; the use of the runway condition assessment matrix (RCAM) and the requisite operational practices in support of a global reporting format.

1.9 The amendment proposal in **Annex 3** contains the proposal to remove the runway state group in the aerodrome routine and special meteorological report (METAR/SPECI) since its continued use would represent a parallel information stream as a duplication of the proposed new provision contained in Annex 15.

1.10 The amendment proposal in **Annex 6, Parts I and II** concerns the operational aspects of the global reporting format. It establishes the requirement for the pilot-in-command to assess the landing performance prior to landing and a requirement for commercial air transport operations to report when the braking action encountered is not as good as reported. Additionally, the existing guidance in Annex 6, Part I, Attachment C is proposed to be transferred to a new aeroplane performance manual which will be available by the time the proposed SARPs become applicable.

1.11 The amendment proposal in **Annex 8** concerns the nature of the information provided by the aircraft manufacturers. Operations on dry and wet conditions are approved data, while data for operations on contaminated runway are guidance material from the aircraft manufacturer but are proposed to become a certification requirement for future types of aeroplanes. This dualism in the quality of

information adds to the complexity of developing a global reporting format. The FTF-initiated review is mainly from a pilot's perspective for the safe operation of the aircraft.

1.12 The amendment proposal in **Annex 15** are intended to allow the dissemination of information that is harmonized with the provisions in Annex 14, Volume I and PANS-Aerodromes as well as the performance information required to be used in the operation of aeroplane.

1.13 The amendment proposal in the **PANS-ATM** focuses on phraseology. Developing the global reporting format will have an influence on taxonomy and thereby on phraseology. It is vital and paramount to safety that correct taxonomy and phraseology are used throughout the communication chain from the ground staff, through ATS to the end users, i.e. the flight crew.

1.14 The amendment proposal related to Annex 14, Volume I has been presented and endorsed at the Third Meeting of the Aerodromes Panel (AP/3) held from 7 to 11 April 2014. The complete amendment proposal across the required domains has been developed in consultation with the PANS-Aerodromes Study Group (PASG), Operations Panel (OPSP), Airworthiness Panel (AIRP), Aeronautical Information Service –Aeronautical Information Management Study Group (AIS-AIMSG) and the Air Traffic Management Operations Panel (ATMOPSP).

## 2. BENEFITS AND COST IMPACT

2.1 It is envisaged that improvement to the safety of aircraft operations on wet and contaminated runways using the new global reporting format would result from:

a) a unique format for reporting runway condition in a uniform manner through all available means;

b) establishment of standard criteria for the determination of the RWYCC, type, depth and coverage of contaminants by aerodrome personnel;

c) improved capability by trained and competent aerodrome personnel assessing and reporting runway surface conditions;

d) the calculation of take-off and landing operational distances through the use of performance tables by the aircraft manufacturers that are correlated to the RWYCC, type, depth and coverage of contaminants; and

e) in addition, regularity and efficiency of operations would be increased through the calculation of operational take-off and landing distances with approved tables of performance.

2.2 In terms of cost, it is envisaged that the amendment proposals across the various Annexes and PANS would involve States generating a series of regulatory amendment and implementing a robust oversight process where differences between national practices and those in the Annexes and PANS need to be filed and published in their national AIPs, respectively. For the aerodrome operators, the financial cost will be limited to the training of staff (runway assessors) exposed to the change; for other stakeholders such as the aircraft manufacturers and aircraft operators there will be financial costs associated with such items as training, updating documentation and programming of associated software.

## 3. PROCEDURES FOR AIR NAVIGATION SERVICES (PANS) — AERODROMES (DOC 9981)

3.1 The ICAO Council, at the fifth meeting of its 204th Session on 4 March 2015, adopted the SARPs constituting Amendment 12 to Annex 14, Volume I introducing the use of PANS-Aerodromes. Amendment 12, including the procedures in the first Edition of PANS-Aerodromes (Doc 9981), will become applicable on 10 November 2016. The draft first edition of the PANS-Aerodromes is currently available on the ICAONET and is expected to be published very soon.

3.2 The first edition contained four chapters that only partly complete the list of subjects identified by the Air Navigation Commission (ANC) during the establishment of the PANS-Aerodromes Study Group (PASG) for inclusion in the PANS-Aerodromes document. This was mainly attributed to the objective of the first edition which was to address priority issues arising from the USOAP audits in the areas of aerodrome certification, safety assessment and aerodrome compatibility.

3.3 While the first edition was being progressed, the PASG had continued to develop material for the remaining chapters which will provide procedures on aerodrome operational matters. The procedures on aerodrome operational matters are expected to be voluminous covering no less than sixteen topics concerning day-to-day aerodrome operations. In light of this, PASG discussed two options of presenting the new material to support the new framework i.e. splitting the PANS-Aerodromes into:

a) two different Volumes; or

b) two Parts within the same document.

3.4 PASG/6 (December 2014) decided to adopt option b) and agreed that the PANS-Aerodromes remains as one document but sub-divided into parts. The first edition – which had since been approved by the ICAO Council in paragraph 3.1 – be called Part I and the upcoming second edition be called Part II. Part I contains the first edition with original four chapters and Part II with materials concerning day-to-day aerodrome operational matters. A further benefit of splitting the document into parts is the ability to begin the second part with Chapter 1 and add to the part without disruption to the first part. This proposal is generally in line with current practice in *Procedures for Air Navigation Services — Aircraft Operations* (Doc 8168) and had been accepted by the ANC.

3.5 The upcoming materials in Part II concerning aerodrome operational management being developed by the PASG is in line with the intent of a PANS document, in that it provides material for the day-to-day operation of an aerodrome. In developing this material the PASG members were cognisant that given the wide range of aerodromes, defined procedures applicable to all airports would be rare but that the development of some basic principles would be possible. At PASG/5 (March 2013), the following structure was developed during the development of material that took into consideration such principle:

a) the “General” section of the chapter includes an introduction to each of the topics covered in the subsequent chapter. It also provides an overview of the general principles in order to understand the procedures that follow;

b) the “Objectives” section contains the basic principles that have been defined for the topic. These basic principles have been formulated as required for global uniform application. The “Objectives” cover the whole subject matter and are not broken down into the individual subsections; and

c) the “Operational Practices” section covers the specific operational practices and the ways in which they are applied in order to achieve the basic principles defined in “Objectives”.

3.6 The material in Attachment C to this State letter concerning procedures for the application of the global reporting format for runway surface condition assessing and reporting proposed in the second edition of PANS-Aerodromes have been structured along the principle described in paragraph 3.5.

— — — — — — — —

**ATTACHMENT B** to State letter AN 4/1.1.55-15/30

## PROPOSED AMENDMENT TO ANNEX 14, VOLUME I

### NOTES ON THE PRESENTATION OF THE AMENDMENT

The text of the amendment is arranged to show deleted text with a line through it and new text highlighted with grey shading, as shown below:

| | |
|---|---|
| ~~Text to be deleted is shown with a line through it.~~ | Text to be deleted |
| New text to be inserted is highlighted with grey shading. | New text to be inserted |
| ~~Text to be deleted is shown with a line through it~~ followed by the replacement text which is highlighted with grey shading. | New text to replace existing text |

**TEXT OF PROPOSED AMENDMENT TO THE**

**INTERNATIONAL STANDARDS**
**AND RECOMMENDED PRACTICES**

**AERODROMES**

**ANNEX 14**
**TO THE CONVENTION ON INTERNATIONAL CIVIL AVIATION**

**VOLUME I**
**AERODROME DESIGN AND OPERATIONS**

. . .

**INITIAL PROPOSAL 1**

## CHAPTER 1. GENERAL

. . .

### 1.1 Definitions

. . .

***Runway condition report (RCR)***. A comprehensive standardized report relating to runway surface conditions and its effect on the aeroplane landing and take-off performance.

| *Origin* | *Rationale* |
|---|---|
| AP-WG/WHL-7, AOSWGs/10 – 13, ANC Job Card AP001, APWG/2 | The origin of the concept of a global reporting format stems from the operational need of having one reporting format crossing state borders. A flight crew should not need to relate to various reporting formats. As a basis for such a global reporting format, the United States FAA-initiated Take-off and Landing Performance Assessment – Aviation Rulemaking Committee (TALPA ARC) approach was chosen since this approach establishes the common and performance-relevant language between aerodrome, aeroplane manufacturer and aeroplane operator and was already used in aeroplane performance manuals provided by the major aeroplane manufacturers.<br><br>The term “runway condition report” (RCR) is used in the interim period in Annex 14, Volume I and in the PANS-Aerodromes for the global reporting format until such time as the AIS is transformed to AIM, together with the restructuring of Annex 15 and a new term/acronym may be developed.<br><br>The output from the global reporting format is an information string resulting from an assessment process using procedures described in the PANS-Aerodromes. |

. . .

***Runway***. A defined rectangular area on a land aerodrome prepared for the landing and take-off of aircraft.

***Runway condition assessment matrix (RCAM)***. A matrix allowing the assessment of the runway condition code, using associated procedures, from a set of observed runway surface condition(s) and pilot report of braking action.

***Runway condition code (RWYCC)***. A number describing the runway surface condition to be used in the runway condition report.

*Note.— The purpose of the runway condition code is to permit an operational aeroplane performance calculation by the flight crew. Procedures for the determination of the runway condition code are described in the PANS-Aerodromes (Doc 9981).*

| *Origin* | *Rationale* |
|---|---|
| FTF, AP3 | The RWYCC is reported to the flight crew as a result of an assessment of the runway surface condition by the runway inspectors using the runway condition assessment matrix (RCAM) and associated procedures in the PANS-Aerodromes. The RWYCC reflects the effect on aircraft stopping performance of water or naturally occurring contaminants on the runway surface. With this information, flight crew can compute the necessary stopping distance of an aircraft under the prevailing conditions based on performance information provided by the aeroplane manufacturer. The RWYCC is reported for each runway third intended to be used. |

. . .

***Runway surface condition(s)***. A description of the condition(s) of the runway surface used in the global reporting format which establishes the basis for the determination of the runway condition code for aeroplane performance purposes.

*Note 1.— The runway surface conditions used in the global reporting format establish the performance requirements between the aerodrome operator, aeroplane manufacturer and aeroplane operator.*

*Note 2.— Aircraft de-icing chemicals and other contaminants are also reported but are not included in the list of runway surface condition descriptors because their effect on runway surface friction characteristics and the runway condition code cannot be evaluated in a standardized manner.*

a) *Dry runway*. A runway is considered dry if its surface is not wet or contaminated and free of visible moisture within the area intended to be used.

| *Origin* | *Rationale* |
|---|---|
| FTF, AP3 | Although this definition is by default, it is felt that a separate definition for DRY is needed. |

b) *Wet runway*. The runway surface is covered by any visible dampness or water less than 3 mm deep within the intended area of use.

| *Origin* | *Rationale* |
|---|---|
| FTF, AP3 | The definition makes reference to water depth and includes the condition where the surface is just damp. There is no definition for DAMP. From a performance point of view, a damp runway is considered wet. The definition of wet includes visible dampness. |

c) *Slippery wet runway*. A wet runway where the surface friction characteristics of a significant portion of the runway has been determined to be degraded.

| *Origin* | *Rationale* |
|---|---|
| FTF, AP3 | The proposed definition links the term *slippery wet runway* to the noticeably reduced braking deceleration or directional control experienced on such a runway. See also rationales for 2.9.9 and 2.9.10. |

d) *Contaminated runway*. A runway is contaminated when a significant portion of the runway surface area (whether in isolated areas or not) within the length and width being used is covered by one or more of the substances listed in the runway surface condition descriptors.

| *Origin* | *Rationale* |
|---|---|
| FTF, AP3 | The term *contaminated runway* as defined above differs from the term currently in Annex 6, the latter to be amended if accepted.<br><br>The term *contaminated runway* as defined above contains the term *runway surface condition descriptors* and the various descriptors must be regarded as one entity identifying contaminated runway as relevant to aeroplane performance in the context of the global reporting format. |

e) *Runway surface condition descriptors*. One of the following elements on the surface of the runway:

*Note.— The descriptions for e) i) to e) viii), below, are used solely in the context of the global reporting format and are not intended to supersede or replace any existing WMO definitions.*

| *Origin* | *Rationale* |
|---|---|
| FTF, AP3 | The *runway surface condition descriptors* are defined in a way which facilitate their determination by the aerodrome personnel in charge of runway surface condition assessment whatever technological means available at the aerodrome. |

i) *Compacted snow*. Snow that has been compacted into a solid mass such that aeroplane tires, at operating pressures and loadings, will run on the surface without significant further compaction or rutting of the surface.

| *Origin* | *Rationale* |
|---|---|
| FTF, AP3 | Compacted snow is considered a hard contaminant only affecting effective wheel to ground friction and not contaminant drag. The definition of compacted snow is meant to include both an artificially compacted surface and one resulting from natural compaction. |

ii) *Dry snow*. Snow from which a snowball cannot readily be made.

| *Origin* | *Rationale* |
|---|---|
| FTF, AP3 | The TALPA ARC definition includes the aspect that dry snow can be blown by the wind. It was decided that this aspect was not useful in identifying dry snow. |

iii) *Frost*. Frost consists of ice crystals formed from airborne moisture on a surface whose temperature is below freezing. Frost differs from ice in that the frost crystals grow independently and therefore have a more granular texture.

*Note 1.— Below freezing refers to air temperature equal to or less than the freezing point of water (0OC).*

*Note 2.— Under certain conditions frost can cause the surface to become very slippery and it is then reported appropriately as reduced braking action.*

| *Origin* | *Rationale* |
|---|---|
| FTF, AP3 | The purpose of Note 2 is to appeal to local knowledge and specificities in judging the effect of frost thickness and formation method as to its slipperiness. |

iv) *Ice*. Water that has frozen or compacted snow that has transitioned into ice, in cold and dry conditions.

| *Origin* | *Rationale* |
|---|---|
| FTF, AP3 | The main aspect is that the ice should be cold and dry, distinct from wet ice. For the sake of description, however, it appeared important not to exclude a possible mechanism of formation of such ice, even if it has little impact on the eventual effect on aeroplane performance. Black ice was mentioned in the discussions, but is not different in how it occurs. Freezing rain is now included in the definition of wet ice since from a performance point of view, that is what it must be associated with. In doubt a continuous friction measuring equipment (CFME) measurement and runway inspector local judgement can allow to correctly classify as icy. |

v) *Slush*. Snow that is so water saturated that water will drain from it when a handful is picked up or will splatter if stepped on forcefully.

vi) *Standing water*. Water of depth equal to or greater than 3 mm.

*Note.— Running water of depth equal to or greater than 3 mm is reported as standing water by convention.*

| *Origin* | *Rationale* |
|---|---|
| FTF, AP3 | The definition of *standing water* includes the threshold defined by aeroplane performance criteria, namely the onset of aquaplaning. The term "standing water" was considered usual and useful in the differentiation from "wet". |

vii) *Wet ice*. Ice with a layer of water on top of it or ice that is melting.

*Note.— Freezing precipitation can lead to runway conditions associated with wet ice from an aeroplane performance point of view. Wet ice can cause the surface to become very slippery. It is then reported appropriately as reduced braking action in line with procedures in the PANS-Aerodromes (Doc 9981).*

| *Origin* | *Rationale* |
|---|---|
| FTF, AP3 | In the definition of *frost*, there is indirect reference to this wet ice condition. Under certain conditions, ice can cause the surface to become very slippery. It should then be reported appropriately as reduced braking action in line with procedures in PANS-Aerodromes. |

viii) *Wet snow*. Snow that contains enough water content to be able to make a well-compacted, solid snowball, but water will not squeeze out.

| *Origin* | *Rationale* |
|---|---|
| FTF, AP3 | The FAA definition was retained in favour of the last FTF definition, which does not make a clear distinction with slush. |

. . .

***Runway visual range (RVR)***. The range over which the pilot of an aircraft on the centre line of a runway can see the runway surface markings or the lights delineating the runway or identifying its centre line.

. . .

***Signal area***. An area on an aerodrome used for the display of ground signals.

~~***Slush***. Water-saturated snow which with a heel-and-toe slap-down motion against the ground will be displaced with a splatter; specific gravity: 0.5 up to 0.8.~~

~~*Note. — Combinations of ice, snow and/or standing water may, especially when rain, rain and snow, or snow is falling, produce substances with specific gravities in excess of 0.8. These substances, due to their high water/ice content, will have a transparent rather than a cloudy appearance and, at the higher specific gravities, will be readily distinguishable from slush.*~~

~~***Snow (on the ground)***.~~

~~a) Dry snow. Snow which can be blown if loose or, if compacted by hand, will fall apart again upon release; specific gravity: up to but not including 0.35.~~

~~b) Wet snow. Snow which, if compacted by hand, will stick together and tend to or form a snowball; specific gravity: 0.35 up to but not including 0.5.~~

~~c) Compacted snow. Snow which has been compressed into a solid mass that resists further compression and will hold together or break up into lumps if picked up; specific gravity: 0.5 and over.~~

***Station declination***. An alignment variation between the zero degree radial of a VOR and true north, determined at the time the VOR station is calibrated.

| *Origin* | *Rationale* |
|---|---|
| FTF, AP3 | The current definitions had their origins back in 1960's within the United Kingdom. They were developed for reporting and research purposes with the intent to link them to aeroplane performance. A direct link to Annex 6 and Annex 8, however, was never achieved. The definitions are now recommended to be changed to the ones now used as part of development of the global reporting format. The global reporting format is based upon the TALPA ARC recommendations to FAA and the ICAO SNOWTAM format. A new family of definitions of the terms used to link runway contaminants to aeroplane performance is proposed. This will represent a major step forward on global harmonization since these terms will be used in the manuals for aeroplane performance. |

. . .

**INITIAL PROPOSAL 2**

## CHAPTER 2. AERODROME DATA

. . .

### 2.9 Condition of the movement area and related facilities

2.9.1 Information on the condition of the movement area and the operational status of related facilities shall be provided to the appropriate aeronautical information services units, and similar information of operational significance to the air traffic services units, to enable those units to provide the necessary information to arriving and departing aircraft. The information shall be kept up to date and changes in conditions reported without delay.

*Note.— Nature, format and conditions of the information to be provided are specified in Annex 15 and PANS-ATM (Doc 4444).*

2.9.2 The condition of the movement area and the operational status of related facilities shall be monitored, and reports on matters of operational significance affecting aircraft and aerodrome operations shall be provided in order to take appropriate action, particularly in respect of the following:

a) construction or maintenance work;

b) rough or broken surfaces on a runway, a taxiway or an apron;

c) water, snow, slush, ice, or frost on a runway, a taxiway or an apron;

~~d) water on a runway, a taxiway or an apron;~~

d) anti-icing or de-icing liquid chemicals or other contaminants on a runway, taxiway or apron;

e) snow banks or drifts adjacent to a runway, a taxiway or an apron;

~~f) anti-icing or de-icing liquid chemicals or other contaminants on a runway, taxiway or apron;~~

~~g)~~ f) other temporary hazards, including parked aircraft;

~~h)~~ g) failure or irregular operation of part or all of the aerodrome visual aids; and

~~i)~~ h) failure of the normal or secondary power supply.

*Note 1.— Other contaminants may include mud, dust, sand, volcanic ash, oil and rubber.* ~~*Annex 6, Part I, Attachment C provides guidance on the description of runway surface conditions. Additional guidance is included in the* Airport Services Manual *(Doc 9137), Part 2.*~~ *Procedures for monitoring and reporting the conditions of the movement area are included in the PANS-Aerodromes (Doc 9981).*

| *Origin* | *Rationale* |
|---|---|
| FTF, AP3 | Water can be listed together with snow, slush, ice or frost and existing item d) can be deleted.<br><br>The relevant part of the guidance in *Airport Services Manual* (Doc 9137), Part 2 is proposed to be rewritten and moved to PANS-Aerodromes. |

*Note 2.— Annex 6, Part I, Attachment C provides guidance on aircraft performance calculation requirements regarding description of runway surface conditions in 2.9.2 c), d) and e).*

*Note 3.— Origin and progression of data, assessment process and the procedures are prescribed in the PANS-Aerodromes (Doc 9981). These procedures are intended to fulfil the requirements to achieve the desired level of safety for aeroplane operations prescribed by Annex 6 and Annex 8 and to provide the information fulfilling the syntax requirements for dissemination specified in Annex 15 and the PANS-ATM (Doc 4444).*

| *Origin* | *Rationale* |
|---|---|
| FTF, AP3 | Annex 15 and PANS-ATM give the syntax and format for dissemination but do not provide or contain the operational requirements (Annex 6 and Annex 8) dictating the data collection and origin of the information (Annex 14) to be disseminated. There seems to be confusion related to the understanding of how information are provided and disseminated, and the purpose of this dissemination. The proposed Notes attempt to bring more clarity to this issue. |

~~*Note 2.— Particular attention would have to be given to the simultaneous presence of snow, slush, ice, wet ice, snow on ice with anti-icing or de-icing liquid chemicals.*~~

~~*Note 3.— See 2.9.11 for a list of winter contaminants to be reported.*~~

| *Origin* | *Rationale* |
|---|---|
| FTF, AP3 | Existing Note 2 is proposed to be relocated to the PANS-Aerodromes. Note 3 is there as a consequence of Note 2 and points to another paragraph. When Note 2 is moved Note 3 can be removed. |

~~2.9.3 To facilitate compliance with 2.9.1 and 2.9.2, inspections of the movement area shall be carried out each day at least once where the code number is 1 or 2 and at least twice where the code number is 3 or 4.~~

2.9.3 To facilitate compliance with 2.9.1 and 2.9.2, the following inspections shall be carried out each day:

a) for the movement area, at least once where the aerodrome reference code number is 1 or 2 and at least twice where the aerodrome reference code number is 3 or 4; and

b) for the runway(s), inspections in addition to a) whenever the runway surface conditions significantly change due to meteorological conditions.

| *Origin* | *Rationale* |
|---|---|
| FTF, AP3 | Additional inspection on the runway(s) is proposed whenever the runway surface conditions changes significantly due to meteorological conditions. The proposed Note 2 describes what may constitute "significant changes".<br><br>"Aerodrome reference" added in front of "code" for not to be confused with *runway condition code*. |

*Note 1.— ~~Guidance~~ Procedures on carrying out daily inspections of the movement area ~~is~~ are given in the ~~Airport Services Manual (Doc 9137), Part 8 and~~ PANS-Aerodromes (Doc 9981). Further guidance are available in the* Airport Services Manual *(Doc 9137), Part 8, in the* Manual of Surface Movement Guidance and Control Systems (SMGCS) *(Doc 9476) and in the* Advanced Surface Movement Guidance and Control Systems (A-SMGCS) Manual *(Doc 9830).*

*Note 2.— A change in the runway surface condition(s) used in the global reporting format is considered significant whenever there is an effect on the RWYCC, type and depth of contaminant. Further information is available in the PANS-Aerodromes (Doc 9981).*

| *Origin* | *Rationale* |
|---|---|
| FTF, AP3 | The content in *Airport Services Manual* (Doc 9137), Part 8 dealing with wet and contaminated runways is proposed to be relocated to the PANS-Aerodromes.<br><br>Text to be moved/rewritten:<br>Chapter 6 – Adverse Weather Conditions<br>Chapter 7 – Measurement of Surface Friction |

| | |
|---|---|
| | In addition, it is proposed that the Note be edited to include the *Advanced Surface Movement Guidance and Control Systems (A-SMGCS) Manual* (Doc 9830). This to be consistent with the Note 2 to Annex 14, Volume I, paragraph 10.2.1. |

2.9.4 ~~**Recommendation**.~~ *Personnel assessing and reporting runway surface conditions required in 2.9.2 and 2.9.~~8~~ 5 ~~should~~ shall be trained ~~and competent to meet criteria set by the State~~ to perform their duties.*

*Note 1.— Guidance on training of personnel is given in Attachment A, Section 6.*

*Note 2.— ~~Guidance on criteria is included in the Airport Services Manual (Doc 9137), Part 8, Chapter 7.~~ Information on training for personnel assessing and reporting runway surface conditions is available in the PANS-Aerodromes (Doc 9981).*

| *Origin* | *Rationale* |
|---|---|
| FTF, AP3 | The information provided by personnel assessing and reporting runway surface condition is crucial to the success of the global reporting format. This requires personnel assessing and reporting runway surface condition to be trained to perform their duties; consequently, the existing Recommendation is proposed to be upgraded to the level of a Standard. It is important to note, however, that a misreported runway condition alone should not lead to an accident or incident. Operational margins should cover for a reasonable error in the assessment, including unreported development of the runway condition. But a misreported runway condition can mean that the margins are no longer available to cover for other operational variance (unexpected tailwind, high and fast above threshold or long flare).<br><br>This is further justified by the need to provide the assessed information under the proper format for dissemination, which requires insight into the limitations set by the syntax for dissemination. This in turn restricts the wording of plain text remarks that can be provided. To achieve the desired safety level for aeroplane performance on wet and contaminated runways it becomes essential to follow standard procedures when providing assessed information on the runway surface conditions.<br><br>Existing wording included a requirement for personnel competency, but the APWGs/2 considered this requirement could not be transposed in an applicable regulation, was redundant with the requirement for training and should be removed.<br><br>The training material in *Airport Services Manual* (Doc 9137), Part 8, Chapter 7 is proposed to be reviewed and moved to the PANS-Aerodromes. |

~~***Water on a runway***~~

***Runway surface condition(s) for use in the global reporting format***

*Introductory Note.— The philosophy of the global reporting format is that the aerodrome operator assesses the runway surface conditions whenever water, snow, slush, ice or frost are present on an*

*operational runway. From this assessment, a runway condition code (RWYCC) and a description of the runway surface are reported which can be used by the flight crew for aeroplane performance calculations. This report, based on the type, depth and coverage of contaminants, is the best assessment of the runway surface condition by the aerodrome operator; however, all other pertinent information may be taken into consideration. See Attachment A, Section 6, for further details. The PANS-Aerodromes (Doc 9981) contains procedures on the use of the global reporting format and assignment of the RWYCC in accordance with the runway condition assessment matrix (RCAM).*

| *Origin* | *Rationale* |
|---|---|
| FTF, AP3 | The existing titles "Water on a runway" and "Snow, slush, ice or frost on a runway" are proposed to be removed. The reason for this deletion is linked to the introduction of the global reporting format. The background and philosophy behind the global reporting format is described in a new introductory note.<br><br>This implies that wet runway conditions need to be reported, not only when associated with snow and ice as in the SNOWTAM format.<br><br>Annex 14, Volume I should list the defined terms to be used in the global reporting format. This can be achieved by including them in the terms listed in paragraph 2.9.11 which will then also include the terms related to DRY and the various wet terms to be used. The PANS-Aerodromes should then list guidance on special action on all the topics listed.<br><br>The paragraphs from 2.9.5 to 2.9.11 have been listed in a more logical order. Some paragraphs that have a strikethrough are moved to new locations. |

~~2.9.5 **Recommendation**. — *Whenever water is present on a runway, a description of the runway surface conditions should be made available using the following terms:*~~

~~*DAMP — the surface shows a change of colour due to moisture.*~~
~~*WET — the surface is soaked but there is no standing water.*~~
~~*STANDING WATER — for aeroplane performance purposes, a runway where more than 25 per cent of the runway surface area (whether in isolated areas or not) within the required length and width being used is covered by water more than 3 mm deep.*~~

2.9.5 The runway surface condition shall be assessed and reported through a runway condition code (RWYCC) and a description using the following terms:

DRY
WET ICE
WATER ON TOP OF COMPACTED SNOW
DRY SNOW
DRY SNOW ON TOP OF ICE
WET SNOW ON TOP OF ICE
ICE
SLUSH
STANDING WATER
COMPACTED SNOW
WET SNOW
DRY SNOW ON TOP OF COMPACTED SNOW

WET SNOW ON TOP OF COMPACTED SNOW
WET
FROST
CHEMICALLY TREATED
LOOSE SAND

*Note 1.— The runway surface conditions are those conditions for which, by means of the methods described in the PANS-Aerodromes (Doc 9981), the flight crew can derive appropriate aeroplane performance.*

*Note 2.— The conditions, either singly or in combination with other observations, are criteria for which the effect on aeroplane performance is sufficiently deterministic to allow assignment of a specific runway condition code.*

~~2.9.6 Information that a runway or portion thereof may be slippery when wet shall be made available.~~

~~*Note. The determination that a runway or portion thereof may be slippery when wet is not based solely on the friction measurement obtained using a continuous friction measuring device. Supplementary tools to undertake this assessment are described in the* Airport Services Manual *(Doc 9137), Part 2.*~~

2.9.6 Whenever an operational runway is contaminated, an assessment of the contaminant depth and coverage over each third of the runway shall be made and reported.

| *Origin* | *Rationale* |
|---|---|
| FTF, AP3 | The importance of reporting by runway thirds is recognized by the Annex 6/Annex 8 subgroup and has been highlighted in the FTF/12 IP/04 – Rationale for 25 per cent coverage threshold for wet/contaminated reporting.<br><br>The procedures associated with the global reporting format based on the TALPA RCAM assign runway condition codes below six, only when more than 25 per cent of the runway is wet or contaminated. This was based on a demonstration made in the frame of the TALPA, the assumptions of which are important to note and implement in the assessment procedures.<br><br>When revisiting these reporting rules at ICAO level, it is of major importance that the "by third of runway length rule" described above is implemented. Otherwise the worst case of 25 per cent of full runway length contamination concentrated at runway end would not be covered by the 15 per cent margin on the in-flight landing distance. |

~~2.9.7 Notification shall be given to aerodrome users when the friction level of a paved runway or portion thereof is less than that specified by the State in accordance with 10.2.3.~~

~~*Note. Guidance on conducting a runway surface friction characteristics evaluation programme that includes determining and expressing the minimum friction level is provided in Attachment A, Section 7.*~~

| *Origin* | *Rationale* |
|---|---|
| FTF, AP3 | Existing paragraph 2.9.7 is proposed to be relocated to (new) 2.9.10 as the order of sequence is considered more logical and easier to read and understand. |

~~***Snow, slush, ice or frost on a runway***~~

~~Note 1. The intent of these specifications is to satisfy the SNOWTAM and NOTAM promulgation requirements contained in Annex 15.~~

~~Note 2. Runway surface condition sensors may be used to detect and continuously display current or predicted information on surface conditions such as the presence of moisture, or imminent formation of ice on pavements.~~

| *Origin* | *Rationale* |
|---|---|
| FTF, AP3 | Note 1 is proposed to be deleted. This information is provided in the proposed Notes 2 and 3 to paragraph 2.9.2. There should be no need to duplicate this information even though the reporting format is not specifically named in Notes 2 and 3 to paragraph 2.9.2.<br><br>Note 2 is also proposed to be deleted as it may be too detailed at the level of a SARP. It is proposed to place the deleted guidance in the PANS-Aerodromes. |

~~2.9.8 Whenever an operational runway is contaminated by snow, slush, ice or frost, the runway surface condition shall be assessed and reported.~~

~~*Note. Guidance on assessment of snow- and ice-covered paved surfaces is provided in Attachment A, Section 6.*~~

| *Origin* | *Rationale* |
|---|---|
| FTF, AP3 | Existing paragraph 2.9.8 is proposed to be merged with new paragraph 2.9.6. |

~~2.9.9 **Recommendation**. *Runway surface friction measurements made on a runway that is contaminated by slush, wet snow or wet ice should not be reported unless the reliability of the measurement relevant to its operational use can be assured.*~~

~~*Note. Contaminant drag on the equipment's measuring wheel, amongst other factors, may cause readings obtained in these conditions to be unreliable.*~~

2.9.7 When friction measurements are used as part of the overall runway surface assessment on compacted snow- or ice-covered surfaces, the friction measuring device shall meet the standard set or agreed by the State.

| *Origin* | *Rationale* |
|---|---|
| FTF, AP3 | Due to inherent difficulties with readings from friction measuring devices, their use shall be controlled by the State. See also rationale for new paragraph 2.9.8. |

2.9.8 **Recommendation**.— *Friction measurements made on runway surface conditions with contaminants other than compacted snow and ice should not be reported.*

| *Origin* | *Rationale* |
|---|---|
| FTF, AP3 | Promulgation of mu-values by use of friction measuring devices for flight operation purposes on other surfaces than compacted snow and ice has traditionally not been supported as misleading readings could be provided. Operational measurements on wet runways are also not supported as the scales that have been associated with wet runways have had another origin than those provided for snow and ice. They have not been interchangeable.<br><br>Friction numbers that were reported had been used with the understanding that pilots could "learn" from their use how they related to their aeroplane operations. Since this was introduced and more experience gained, it was recognized that one had to distinguish between devices of different kinds and the extension describing the device used should be attached to the readings.<br><br>Further experience revealed that devices of same make and kind did have a significant variability in their readings, i.e. issues associated with repeatability and reproducibility. This experience was gained under controlled experiments on wetted runways (wetted by the measuring device's own watering systems).<br><br>Through the European Aviation Safety Agency (EASA) Runway Friction Characteristics and Measurement and Aircraft Braking (RuFAB) project it was also revealed that devices were not time stable. Research post RuFAB has revealed that this quality is tied up with how devices are used/controlled and the time stability can be improved with present day knowledge.<br><br>The uncertainty attached to readings from friction measuring devices has several aspects which are not controlled at aerodromes according to the way they generally use the devices today. Further to this, the industry has not been able to provide a reference to which friction measuring devices can be harmonized. For this reason, it is not proper to use the term accuracy when referring to readings from friction measuring devices. They can only be used for comparison or trend monitoring.<br><br>The problems above have been addressed by the "industry" and by organizations developing international standards. Both within the American Society for Testing of Materials (ASTM) and the European Committee for Standardization (Comité Européen de Normalisation-CEN), there are activities addressing the issues. States do participate within these standard developments, either directly or by monitoring the development and it is expected that some of the issues can be further controlled and the uncertainty reduced provided that the new knowledge are used when controlling the fleet of devices used.<br><br>It will be the responsibility of the States in their approval process for the devices to be used, either for operational use on snow and ice or for maintenance purposes, to incorporate this knowledge.<br><br>A single measurement with a continuous friction measuring device is not |

| | |
|---|---|
| | enough to relate it to operational use (aeroplane performance). |

2.9.9 Information that a runway or portion thereof is slippery wet shall be made available.

*Note.— The surface friction characteristics of a runway or a portion thereof can be degraded due to rubber deposits, surface polishing, poor drainage or other factors. The determination that a runway or portion thereof is slippery wet stems from various methods used solely or in combination. These methods may be functional friction measurements, using a continuous friction measuring device, that fall below a minimum standard as defined by the State, observations by aerodrome maintenance personnel, repeated reports by pilots and aircraft operators based on flight crew experience or through analysis of aeroplane stopping performance that indicates a substandard surface. Supplementary tools to undertake this assessment are described in the PANS-Aerodromes (Doc 9981).*

| *Origin* | *Rationale* |
|---|---|
| FTF, AP3 | The term may be *slippery when wet* has been changed to *slippery wet*. This reflects the definition of a **slippery wet runway**. See rationales for the term **slippery wet runway** in Section 1.1 Definitions/Runway surface condition(s)/(c) and 2.9.9 and 2.9.10.<br><br>The *Airport Services Manual* describes in 3.1.1:<br><br>"*There is an operational need for information on paved runways that may become slippery when wet. To this end, there is a need to measure periodically the friction characteristics of a paved runway surface to ensure that they do not fall below an agreed level. An indication of the friction characteristics of a paved runway can be obtained by friction-measuring devices; however, further experience is required to correlate the results obtained by such devices with airplane braking performance due to the many variables involved, such as runway temperature, tire inflation pressure, test speed, tire-operating mode (locked wheel, brake slip), anti-skid system efficiency, and measured speed and water depth.*"<br><br>The further experience gained has revealed more uncertainty and the method is now considered as flawed when related to aeroplane performance.<br><br>The method described in the *Airport Services Manual*, Part 2, Appendix 1 – *Method for Determining the Minimum Friction Level* is not fully understood and is not validated as appropriate. Its value as guidance to States is questionable and it should be reviewed and included in Circular 329 during its revision.<br><br>Through the TALPA ARC recommendations it has been proposed to relate the *slippery when wet* to aeroplane braking performance medium. This is an arbitrarily arrived threshold value for aeroplane performance not substantiated in any direct relationship, but it is indicated that the flawed method using friction measuring devices as described in ICAO provisions can be used for arriving at this relationship. The method used in ICAO provisions has its main input from research performed by the United States and equally reflected in the FAA AC 150/5320-12 – *Measurement, construction, and maintenance of skid-resistant airport pavement surfaces*. (From 1975 to latest version 12 C in 1997 |

| | |
|---|---|
| | with later updated information on manufacturers of friction measuring devices).<br><br>It is recommended to delete the material describing specifically this method in the ICAO provisions and instead make reference to updated methods used by States. States have developed and develops different approaches, using different approved devices and with different threshold values. Furthermore, the State set levels should not be set by another State without close consideration of the rationale of that State's approved method.<br><br>Revised guidance on the methods applicable for assessment of runway surface friction characteristics are described in the PANS-Aerodromes (Doc 9981). Detailed guidance including references of States best practices are documented in ICAO Circular 329 – *Assessment, Measurement and Reporting of Runway Surface Conditions*. |

~~2.9.10 **Recommendation**. *When friction measurements are taken as part of the assessment, the performance of the friction measuring device on compacted snow- or ice-covered surfaces should meet the standard and correlation criteria set or agreed by the State.*~~

~~*Note. Guidance on criteria for, and correlation between, friction measuring devices is included in the* Airport Services Manual *(Doc 9137), Part 2.*~~

2.9.10 Notification shall be given to relevant aerodrome users when the friction level of a paved runway or portion thereof is less than the minimum friction level specified by the State in accordance with 10.2.3.

*Note 1.— Guidance on determining and expressing the minimum friction level is provided in the ICAO Circular 329 –* Assessment, Measurement and Reporting of Runway Surface Conditions.

*Note 2.— Procedures on conducting a runway surface friction characteristics evaluation programme is provided in the PANS-Aerodromes (Doc 9981).*

| *Origin* | *Rationale* |
|---|---|
| FTF, AP3 | The minimum friction level is the level specified by the State corresponding to maintenance criteria under which the surface of a paved runway may become slippery under wet conditions. The change in 2.9.10 is editorial for clarification.<br><br>This guidance was included in Annex 14, Volume 1, Attachment A and in the *Airport Services Manual*, Part 2. It should be rewritten to address the proposed changes and split into harmonized procedures and guidance in the PANS-Aerodromes and in a "State level" to be located in a revised Circ 329 – *Assessment, Measurement and Reporting of Runway Surface Conditions* – see rationale given for paragraph 10.2.3. |

~~2.9.11 **Recommendation**. *Whenever snow, slush, ice or frost is present and reported, the description of the runway surface condition should use the following terms:*~~

~~*DRY SNOW;*~~
~~*WET SNOW;*~~

~~*COMPACTED SNOW;*~~
~~*WET COMPACTED SNOW;*~~
~~*SLUSH;*~~
~~*ICE;*~~
~~*WET ICE;*~~
~~*FROST;*~~
~~*DRY SNOW ON ICE;*~~
~~*WET SNOW ON ICE;*~~
~~*CHEMICALLY TREATED.*~~
~~*SANDED.*~~

~~*and should include, where applicable, the assessment of contaminant depth.*~~

| *Origin* | *Rationale* |
|---|---|
| FTF, AP3 | Revised terms are listed in new paragraph 2.9.5. |

~~2.9.12 **Recommendation**. *Whenever dry snow, wet snow or slush is present on a runway, an assessment of the mean depth over each third of the runway should be made to an accuracy of approximately 2 cm for dry snow, 1 cm for wet snow and 0.3 cm for slush.*~~

| *Origin* | *Rationale* |
|---|---|
| FTF, AP3 | Existing 2.9.12 is considered too prescriptive and is proposed to be relocated to PANS-Aerodromes. |

. . .

**INITIAL PROPOSAL 3**

## CHAPTER 10. AERODROME MAINTENANCE

. . .

### 10.2 Pavements

. . .

10.2.2 The surface of a runway shall be maintained in a condition such as to prevent formation of harmful irregularities.

*Note.— See Attachment A, Section 5.*

10.2.3 A paved runway shall be maintained in a condition so as to provide surface friction characteristics at or above the minimum friction level specified by the State.

*Note.— The* ~~Airport Services Manual *(Doc 9137), Part 2,*~~ *Circ 329* — Assessment, Measurement and Reporting of Runway Surface Conditions *contains further information on this subject, on improving surface friction characteristics of runways.*

| *Origin* | *Rationale* |
|---|---|
| FTF, AP3 | Information is available in the current Circ 329 – *Assessment, Measurement and Reporting of Runway Surface Conditions*. See rationale for 2.9.10 for further details. |

10.2.4 Runway surface friction characteristics for maintenance purposes shall be periodically measured with a continuous friction measuring device using self-wetting features and documented. The frequency of these measurements shall be sufficient to determine the trend of the surface friction characteristics of the runway.

*Note 1.— Guidance on evaluating the runway surface friction characteristics ~~of a runway~~ is provided in ~~Attachment A, Section 7. Additional guidance is included in the~~ ~~Airport Services Manual~~ ~~(Doc 9137), Part 2~~ Circ 329* – Assessment, Measurement and Reporting of Runway Surface Conditions.

*Note 2.— The objective of 10.2.3 to 10.2.6 is to ensure that the surface friction characteristics for the entire runway remain at or above a minimum friction level specified by the State.*

~~*Note 3.— Guidance for the determination of the required frequency is provided in Attachment A, Section 7 and in the*~~ ~~Airport Services Manual~~ ~~*(Doc 9137), Part 2, Appendix 5.*~~

| *Origin* | *Rationale* |
|---|---|
| FTF, AP3 | Referenced information proposed updated and moved to a revised Circ 329 – *Assessment, Measurement and Reporting of Runway Surface Conditions*.<br><br>See also rationale box for 2.9.10. |

10.2.4A When runway surface friction measurements are made for maintenance purposes using a self-wetting continuous friction measuring device, the performance of the device shall meet the standard set or agreed by the State.

10.2.4B Personnel measuring runway surface friction required in 10.2.4A shall be trained to fulfil their duties.

| *Origin* | *Rationale* |
|---|---|
| FTF, AP3 | Amendment 11 to Annex 14 Volume I introduced two new recommendations to assess performances of friction measuring devices used on snow- or ice-covered runways and to specify training criteria for personnel. However, Annex 14 Volume I does not contain similar recommendation for devices and personnel in the case of maintenance assessments.<br><br>Use of CFME for maintenance should be controlled by the States as well as their use on contaminated runways. |

10.2.5 Corrective maintenance action shall be taken to prevent the runway surface friction characteristics for either the entire runway or a portion thereof from falling below a minimum friction level specified by the State.

*Note.— A portion of runway in the order of 100 m long may be considered significant for maintenance or reporting action.*

~~10.2.6 **Recommendation**. — *When there is reason to believe that the drainage characteristics of a runway, or portions thereof, are poor due to slopes or depressions, then the runway surface friction characteristics should be assessed under natural or simulated conditions that are representative of local rain, and corrective maintenance action should be taken as necessary.*~~

10.2.6 **Recommendation**.— *The runway surface should be visually assessed, as necessary, under natural or simulated rain conditions for ponding or poor drainage and where required, corrective maintenance action taken.*

| *Origin* | *Rationale* |
|---|---|
| FTF, AP3 | Text in 10.2.6 has been redrafted to be more precise in addressing the visual aspect of assessing ponding and standing water on the runway. In addition, ponding and standing water are visual manifestations of poor slopes/depressions and are easily detected by the aerodrome personnel in a practical manner. |

. . .

## 10.3 Removal of contaminants

10.3.1 Snow, slush, ice, standing water, mud, dust, sand, oil, rubber deposits and other contaminants shall be removed from the surface of runways in use as rapidly and completely as possible to minimize accumulation.

*Note.— The above requirement does not imply that winter operations on compacted snow and ice are prohibited. ~~Guidance~~ Information on snow removal and ice control and removal of other contaminants is given in the* ~~Aerodrome Services Manual *(Doc 9137), Parts 2 and 9*~~ *PANS-Aerodromes (Doc 9981)*.

| *Origin* | *Rationale* |
|---|---|
| FTF, AP3 | Guidance on snow removal and ice control and removal of other contaminants need to be updated and moved to the PANS-Aerodromes part as harmonized procedures and part as guidance. |

. . .

10.3.4 **Recommendation**.— Whenever the clearance of snow, slush, ice, etc., from the various parts of the movement area cannot be carried out simultaneously, the order of priority after the runway(s) in use should be set in consultation with the affected parties such as rescue and fire fighting service and documented in a snow plan.

*Note 1. — See Annex 15, Appendix 1, Part 3, AD 1.2.2 for information to be promulgated in an AIP concerning a snow plan. The* Aeronautical Information Services Manual *(Doc 8126), Chapter 5 contains guidance on the description of a snow plan including general policy concerning operational priorities established for the clearance of movement areas.*

~~*Note 2. — The* Airport Services Manual *(Doc 9137), Part 8, Chapter 6, specifies that an aerodrome snow plan clearly defines, inter alia, the priority of surfaces to be cleared.*~~

| *Origin* | *Rationale* |
|---|---|
| FTF, AP3 | Note 2 is proposed to be removed.<br><br>The *Airport Services Manual* (Doc 9137), Part 8, Chapter 6 is proposed to be rewritten and moved to the PANS-Aerodromes. See rationale for 2.9.3 Note.<br><br>The content of the snow plan is closely linked to the introduction of the SNOWTAM format and are part of the basic framework. Both were introduced in Amendment 10 to Annex 15 (applicable 8 February 1968) (Source: Aeronautical Information Services and Aeronautical Charts Division (1966)). It can further be traced to proposals by IATA for the development of a comprehensive system for dissemination of information on snow, slush, ice and water on aerodrome pavements. The IATA proposals are further detailed in AN-WP/2669 dated 22/3/63 from which is quoted:<br><br>"*As a justification for this comprehensive system, IATA advances its belief that recent experience during the severe 1962-1963 winter conditions in Europe has shown that this information on runway conditions is of operational importance equal to "other weather phenomena" presently determining the operational usability of aerodromes for high speed turbine powered aircraft."*<br><br>*Accordingly it was agreed that the following basic framework for the dissemination of this information would meet the requirements:-*<br><br>*a) States should prepare, as required, a SNOW PLAN which would describe the methods by which snow, ice, slush and standing water on runways, taxi-ways and aprons would be measured, reported and disseminated. This plan should contain full information concerning the methods to be used for clearing runways taking into account the operational requirements of the airlines. This plan should be circulated to operators as basic information relating to the service to be provided at that location.*"<br><br>The proposed global reporting format implies substantial changes to the ICAO SNOWTAM format. Information related to maintenance activities is no longer communicated. This has implications on the content of the snow plan and on the present text contained in the *Airport Services Manual* (Doc 9137), Part 8, Chapter 6. This text is proposed to be removed and rewritten into the PANS-Aerodromes (Doc 9981) taking into consideration the data origination constraints and also the progress and development since the early 1960's.<br><br>A significant change brought by the proposed global reporting format and influencing the snow plan is the inclusion of the assessment and reporting of wet condition on a whole year basis, not only the presence of snow and ice during the exposed seasons.<br><br>The content of the snow plan is currently under review by the AIS-AIMSG.<br><br>The AIS-AIMSG has very recently established a group to assist FTF to |

| | |
|---|---|
| | structure the future information in line with data origination constraints. |

10.3.5 **Recommendation**.— *Chemicals to remove or to prevent the formation of ice and frost on aerodrome pavements should be used when conditions indicate their use could be effective. Caution should be exercised in the application of the chemicals so as not to create a more slippery condition.*

*Note.— ~~Guidance~~ Information on the use of chemicals for aerodrome pavements is given in the ~~Airport Services Manual (Doc 9137), Part 2~~ PANS-Aerodromes (Doc 9981).*

10.3.6 Chemicals which may have harmful effects on aircraft or pavements, or chemicals which may have toxic effects on the aerodrome environment, shall not be used.

| *Origin* | *Rationale* |
|---|---|
| FTF, AP3 | Chemicals, complying with international industry standards and locally applicable environmental regulations might be harmful to aircraft. When use of chemicals known to have such qualities cannot be avoided by an aerodrome operator there is a need to bring this to the knowledge of the aircraft operators using that particular aerodrome, in order to adjust their maintenance programme.<br><br>The following Note had been proposed for inclusion but the initial APWGs/2 opinion was that standard 10.3.6 included two contradictory requirements and might be degraded to a Note while the proposed Note should be a recommendation. Conclusion was not to retain the proposed Note but to specify a new task to address the issue to be presented at AP/3:<br><br>"*When use of chemicals which may have a harmful effect to aircraft cannot be avoided, information on the impact of the chemicals used may be given to aircraft operators for the purpose of aircraft maintenance.*" |

. . .

**INITIAL PROPOSAL 4**

**ATTACHMENT A. GUIDANCE MATERIAL**
**SUPPLEMENTARY TO ANNEX 14, VOLUME** I

. . .

**~~6. Assessing the surface friction characteristics of snow-, slush-, ice- and frost-covered paved surfaces~~**

~~6.1 There is an operational need for reliable and uniform information concerning the surface condition of contaminated runways. Contaminant type, distribution and for loose contaminants, depth are assessed for each third of the runway. An indication of surface friction characteristics is helpful in conducting runway condition assessment. It can be obtained by friction measuring devices; however, there is no international consensus on the ability to correlate the results obtained by such equipment directly with aircraft performance. However, for contaminants such as slush, wet snow and wet ice, contaminant drag on the equipment's measuring wheel, amongst other factors, may cause readings obtained in these conditions to be unreliable.~~

~~6.2 Any friction measuring device intended predict aircraft braking performance according to an agreed local or national procedure should be shown to correlate such performance in a manner acceptable to the State. Information on the practice of one State providing correlation directly with aircraft braking performance can be found in Appendix A of *Assessment, Measurement and Reporting of Runway Surface Conditions* (ICAO Cir 329).~~

~~6.3 The friction conditions of a runway can be assessed in descriptive terms of "estimated surface friction". The estimated surface friction is categorized as good, medium to good, medium, medium to poor, and poor, and promulgated in Annex 15, Appendix 2, "SNOWTAM format" as well as in PANS-ATM, Chapter 12, 12.3, "ATC phraseologies".~~

**~~Figure A-3. Comparison of roughness criteria~~**

~~6.4 The table below with associated descriptive terms was developed from friction data collected only in compacted snow and ice and should not therefore be taken to be absolute values applicable in all conditions. If the surface is affected by snow or ice and the estimated surface friction is reported as "good", pilots should not expect to find conditions as good as on a clean dry runway (where the available friction may well be greater than that needed in any case). The value "good" is a comparative value and is intended to mean that aeroplanes should not experience directional control or braking difficulties, especially when landing. The figures in the "Measured Coefficient μ" column are given as an indication. At each aerodrome a specific table can be developed according to the measuring device used on the aerodrome and according to the standard and correlation criteria set or agreed by the State. The μ values given will be specific to each friction measuring device as well as to the surface being measured and the speed employed.~~

| ~~*Measured coefficient* μ~~ | ~~*Estimated surface friction*~~ | ~~*Code*~~ |
|---|---|---|
| ~~0.40 and above~~ | ~~Good~~ | ~~5~~ |
| ~~0.39 to 0.36~~ | ~~Medium to good~~ | ~~4~~ |
| ~~0.35 to 0.30~~ | ~~Medium~~ | ~~3~~ |
| ~~0.29 to 0.26~~ | ~~Medium to poor~~ | ~~2~~ |
| ~~0.25 and below~~ | ~~Poor~~ | ~~1~~ |

~~6.5 Relating braking action to friction measurements has been elusive over the years. The main reason is that the industry to date has not achieved the ability to control the total uncertainty associated with the readings from these devices. Consequently, readings from a friction measuring device should be used only as part of an overall runway condition assessment. A major difference between the decelerometer type of devices and the other types is that when using the decelerometer type the operator is an integrated part of the measuring process. In addition to carrying out the measurement, the operator can feel the behaviour of the vehicle where the decelerometer is installed and by that feel the deceleration process. This gives additional information in the total assessment process.~~

~~6.6 It has been found necessary to provide assessed surface condition information, including estimated surface friction, for each third of a runway. The thirds are called A, B and C. For the purpose of reporting information to aeronautical service units, section A is always the section associated with the lower runway designation number. When giving landing information to a pilot before landing, the sections are however referred to as first, second or third part of the runway. The first part always means the first third of the runway as seen in the direction of landing. Assessments are made along two lines parallel to the runway, i.e. along a line on each side of the centre line approximately 3 m, or that distance from the centre line at which most operations take place. The objective of the assessment is to determine the type, depth and coverage of the contaminants and their effect on estimated surface friction, given the prevailing weather conditions for sections A, B and C. In cases where a continuous friction measuring device is used, the mean values are obtained from the friction values recorded for each section. In cases where a spot measuring friction measuring device is used as part of the total assessment of estimated~~

~~surface friction, each third of the runway should have a minimum of three tests carried out on it where achievable. Information collected and assessed on the state of pavement surface is disseminated using forms prepared by the State for SNOWTAM and NOTAM (see the *Airport Services Manual* (Doc 9137) Part 2).~~

~~6.7 The *Airport Services Manual* (Doc 9137), Part 2 provides guidance on the uniform use of test equipment and other information on removal of surface contamination and improvement of friction conditions.~~

## 6. Runway condition report for reporting runway surface condition

6.1 On a global level, movement areas are exposed to a multitude of climatic conditions and consequently a significant difference in the condition to be reported. The runway condition report (RCR) describes a basic methodology applicable for all these climatic variations and is structured in such a way that States can adjust them to the climatic conditions applicable for that State or region.

6.2 The concept of the RCR is premised on:

a) an agreed set of criteria used in a consistent manner for runway surface condition assessment, aeroplane (performance) certification and operational performance calculation ;

b) a unique runway condition code (RWYCC) linking the agreed set of criteria with the aircraft landing and take-off performance table, and related to the braking action experienced and eventually reported by flight crews;

c) a standardized common terminology and phraseology for the description of runway surface conditions that can be used by aerodrome operator inspection personnel, air traffic controllers, and aircraft operators, noticeably flight crew;

d) globally-harmonized procedures for the establishment of the RWYCC with a built-in flexibility to allow for local variations to match the specific weather, infrastructure and other particular conditions.

6.3 These harmonized procedures are reflected in a runway condition assessment matrix (RCAM) which correlates the RWYCC, the agreed set of criteria and the braking action which the flight crew should expect for each value of the RWYCC.

6.4 Procedures which relate to the use of the RCAM are provided in the PANS-Aerodromes (Doc 9981).

6.5 It is recognized that information provided by the aerodrome's personnel assessing and reporting runway surface condition is crucial to the effectiveness of the global reporting format. A misreported runway condition alone should not lead to an accident or incident. Operational margins should cover for a reasonable error in the assessment, including unreported changes in the runway condition. But a misreported runway condition can mean that the margins are no longer available to cover for other operational variance (such as unexpected tailwind, high and fast approach above threshold or long flare).

6.6 This is further amplified by the need for providing the assessed information in the proper format for dissemination, which requires insight into the limitations set by the syntax for dissemination. This in turn restricts the wording of plain text remarks that can be provided.

6.7 To achieve the desired safety level for aeroplane performance on wet and contaminated runways, it is essential to follow standard procedures when providing assessed information on the runway

surface conditions. Personnel should be trained in the relevant fields of competence and their competence verified in a manner required by the State to ensure confidence in their assessments.

6.8 The training syllabus may include initial and periodic recurrent training in the following areas:

a) aerodrome familiarization, including aerodrome markings, signs and lighting;

b) aerodrome procedures as described in the aerodrome manual;

c) aerodrome emergency plan;

d) Notice to Airmen (NOTAM) initiation procedures;

e) completion of/ initiation procedures for RCR;

f) aerodrome driving rules;

g) air traffic control procedures on the movement area;

h) radiotelephone operating procedures;

i) phraseology used in aerodrome control, including the ICAO spelling alphabet;

j) aerodrome inspection procedures and techniques;

k) type of runway contaminants and reporting;

l) assessment and reporting of runway surface friction characteristics;

m) use of runway friction measurement device;

n) calibration and maintenance of runway friction measurement device;

o) low visibility procedures.

| *Origin* | *Rationale* |
|---|---|
| FTF, AP3 | Section 6 is proposed to be rewritten with new guidance to align with the global reporting format. A brief concept of the global reporting format is described in this attachment. Guidance on the training required for personnel assessing and reporting runway surface conditions have been included. Further material on, inter alia, assigning runway condition code is available in the PANS-Aerodromes. |

## ~~7. Determination of surface friction characteristics for construction and maintenance purposes~~

~~*Note. The guidance in this section involves the functional measurement of friction related aspects related to runway construction and maintenance. Excluded from this section is the operational, as opposed to functional, measurement of friction for contaminated runways. However, the devices used for*~~

~~*functional measurement could also be used for operational measurement, but in the latter case, the figures given in* Airport Services Manual *(Doc 9137), Part 2, Table 3-1 are not relevant.*~~

~~7.1 The surface friction characteristics of a paved runway should be:~~

~~a) assessed to verify the surface friction characteristics of new or resurfaced paved runways (Chapter 3, 3.1.25); and~~

~~b) assessed periodically in order to determine the slipperiness of paved runways (Chapter 10, 10.2.4).~~

~~7.2 The condition of a runway pavement is generally assessed under dry conditions using a self-wetting continuous friction measuring device. Evaluation tests of runway surface friction characteristics are made on clean surfaces of the runway when first constructed or after resurfacing.~~

~~7.3 Friction tests of existing surface conditions are taken periodically in order to avoid falling below the minimum friction level specified by the State. When the friction of any portion of a runway is found to be below this value, then such information is promulgated in a NOTAM specifying which portion of the runway is below the minimum friction level and its location on the runway. A corrective maintenance action must be initiated without delay. Friction measurements are taken at time intervals that will ensure the identification of runways in need of maintenance or of special surface treatment before their condition becomes serious. The time intervals and mean frequency of measurements depend on factors such as: aircraft type and frequency of usage, climatic conditions, pavement type, and pavement service and maintenance requirements.~~

~~7.4 Friction measurements of existing, new or resurfaced runways are made with a continuous friction measuring device provided with a smooth tread tire. The device should use self-wetting features to allow measurements of the surface friction characteristics to be made at a water depth of 1 mm.~~

~~7.5 When it is suspected that the surface friction characteristics of a runway may be reduced because of poor drainage, owing to inadequate slopes or depressions, then an additional measurement is made, but this time under natural conditions representative of a local rain. This measurement differs from the previous one in that water depths in the poorly cleared areas are normally greater in a local rain condition. The measurement results are thus more apt to identify problem areas having low friction values that could induce aquaplaning than the previous test. If circumstances do not permit measurements to be conducted during natural conditions representative of a rain, then this condition may be simulated. (See section 8.)~~

~~7.6 When conducting friction tests using a self-wetting continuous friction measuring device, it is important to note that, unlike compacted snow and ice conditions, in which there is very limited variation of the friction coefficient with speed, a wet runway produces a drop in friction with an increase in speed. However, as the speed increases, the rate at which the friction is reduced becomes less. Among the factors affecting the friction coefficient between the tire and the runway surface, texture is particularly important. If the runway has a good macro-texture allowing the water to escape beneath the tire, then the friction value will be less affected by speed. Conversely, a low macro-texture surface will produce a larger drop in friction with increase in speed.~~

~~7.7 Annex 14, Volume I, requires States to specify a minimum friction level below which corrective maintenance action should be taken. As criteria for surface friction characteristics of new or resurfaced runway surfaces and its maintenance planning, the State can establish a maintenance planning level below which appropriate corrective maintenance action should be initiated to improve the friction.~~

~~The *Airport Services Manual* (Doc 9137), Part 2, provides guidance on establishing maintenance planning and minimum friction levels for runway surfaces in use.~~

| *Origin* | *Rationale* |
|---|---|
| FTF, AOSWG, AP3 | The AOSWG/13 preferred to consolidate this and other related guidance in a single location, i.e. in a yet-to-be updated version of Circ 329. This solution, in the absence of a universally applicable method, allows reference to States' existing best practices for the determination of surface friction characteristics for construction and maintenance purposes and provides more practical guidance to States and aerodrome operators. See also rationale in 2.9.10. |

— — — — — — — —

**ATTACHMENT C** to State letter AN 4/1.1.55-15/30

## PROPOSED AMENDMENT TO THE PANS-AERODROMES

## NOTES ON THE PRESENTATION OF THE AMENDMENT

The text of the amendment is arranged to show deleted text with a line through it and new text highlighted with grey shading, as shown below:

| | |
|---|---|
| ~~Text to be deleted is shown with a line through it.~~ | Text to be deleted |
| New text to be inserted is highlighted with grey shading. | New text to be inserted |
| ~~Text to be deleted is shown with a line through it~~ followed by the replacement text which is highlighted with grey shading. | New text to replace existing text |

**TEXT OF PROPOSED AMENDMENT TO THE**

***PROCEDURES FOR AIR NAVIGATION SERVICES — AERODROMES* (PANS-Aerodromes, DOC 9981)**

. . .

**INITIAL PROPOSAL 1**

## FOREWORD

. . .

### 6. CONTENTS OF THE DOCUMENT

6.1 The PANS-Aerodromes consists of two parts as follows:

**Part I — *Aerodrome certification, safety assessments and aerodrome compatibility***
**Part II — *Aerodrome operational management***

6.2 **Part I — *Aerodrome certification, safety assessments and aerodrome compatibility*** describes procedures for the certification of an aerodrome, how to conduct a safety assessment and methods required to assess the compatibility of an aerodrome to accept a proposed change in operation. Part I provides the basic guidelines to States, and those operators and organizations certificating and managing aerodromes.

6.3 **Part II — *Aerodrome operations management*** provides operational procedures for the operation and management of aerodromes and related aerodrome activities. The requirements contained in this part may be applicable to the aerodrome operator and/or other relevant entities operating on the aerodrome. The procedures described in this part provide an overall framework to allow for a standardized approach to aerodrome operations.

6.4 Both parts present coverage of operational practices that are beyond the scope of Standards and Recommended Practices (SARPs) but with respect to which a measure of international uniformity is desirable.

| *Origin* | *Rationale* |
|---|---|
| FTF, PASG | The division of the PANS-Aerodromes into Parts I and II has been proposed as a result of an extensive amendment to its first edition (which had recently been approved by Council) to include upcoming procedures on aerodrome operational management. Prior to 2014, all the PANS-Aerodromes material was contained in a single document. The procedures on AOM are expected to be voluminous covering no less than sixteen topics concerning day-to-day aerodrome operations. PASG/6 (Nov 2014) agreed that the first edition – which had since been approved by the ICAO Council – be called Part I and the upcoming second edition be called Part II. (See further clarifications in rationale box below.) This generally follows the format in the PANS-OPS (Doc 8168) which is partitioned into Parts I, II and III of a single volume. |

# PART I — AERODROME CERTIFICATION, SAFETY ASSESSMENT AND AERODROME COMPATIBILITY

## ~~6.1~~ 6.5 Chapter 1 — Definitions

Chapter 1 contains a list of terms and their technical meanings as used in this document.

## ~~6.2~~ 6.6 Chapter 2 — Certification of aerodromes

6.~~2~~6.1 Chapter 2 outlines the general principles and procedures to be followed through all of the suggested stages of certifying an aerodrome operator: the initial meeting between the State and the aerodrome operator, technical inspections of the aerodrome, approval/acceptance of all or relevant portions of the aerodrome manual, on-site verification of aerodrome operational aspects including the safety management system (SMS) of the operator, analysis of the deviations from regulatory requirements and issuance of the verification report, assessment of the corrective action plan, issuance of the certificate and continued safety oversight.

6.~~2~~6.2 Appendix 1 to Chapter 2 contains a list of the main items to be inspected and/or audited in each of the technical and operational areas including the SMS of the operator. Appendix 2 concerns critical data related to safety occurrences. The attachments to Chapter 2 contain a list of possible subjects for an aerodrome manual, guidance on initial certification process and a checklist that can be used by the State to assess the acceptance of an aerodrome manual and initial certification of an aerodrome. It is appreciated that these will differ according to the legal basis of the State, but some States might find these helpful.

## 6.~~3~~7 Chapter 3 — Safety assessments

Chapter 3 outlines the methodologies and procedures to be followed when undertaking a safety assessment. It includes a brief description of how a safety assessment fulfils an element of the overall aerodrome operator's SMS. An aerodrome operator's SMS should enable the aerodrome operator to manage the safety risks it is exposed to as a consequence of the hazards it must face during the operations of the aerodrome.

## 6.~~4~~8 Chapter 4 — Aerodrome compatibility

6.~~4~~8.1 Chapter 4 outlines a methodology and procedure~~s~~ to assess the compatibility between aeroplane operations and aerodrome infrastructure and operations when an aerodrome accommodates an aeroplane that exceeds the certificated characteristics of the aerodrome.

6.~~4~~8.2 This chapter addresses situations where compliance with the design provisions stipulated in Annex 14 Volume I, is either impractical or physically impossible. Where alternative measures, operational procedures and operating restrictions have been developed, these should be reviewed periodically to assess their continued validity.

6.~~4~~8.3 The attachments to Chapter 4 contain selected aeroplane characteristics data. They are provided for convenience to allow the aerodrome operator to easily compare the characteristics of various commonly operated aeroplanes. However, the data will be subject to change, and accurate data should always be obtained from the aircraft manufacturers' documentation prior to any official assessment of compatibility.

~~**6.5 Chapter 5 Aerodrome operational management *(to be developed)***~~

~~Chapter 5 will outline the general principles and procedures to be followed in providing uniform and harmonized aerodrome operations.~~

## PART II — AERODROME OPERATIONAL MANAGEMENT

6.9 The structure of each chapter within Part II is set up with three specific sections including a general part, the objectives to be achieved, and the operating practices related to these objectives.

6.9.1 The "general" section of the chapter includes an introduction to each of the topics covered in the subsequent chapter. It also provides an overview of the general principles in order to understand the procedures that follow.

6.9.2 The "objectives" section contains the basic principles that have been defined for the topic. These basic principles have been formulated as required for global uniform application. The "Objectives" cover the whole subject matter and are not broken down into the individual subsections.

6.9.3 The "operational practices" section covers the specific operational practices and the ways in which they are applied in order to achieve the basic principles defined in "objectives".

6.9.4 Chapter 1 contains provisions and procedures applicable for assessing and reporting the condition of a runway.

6.9.5 Chapter 2 (*Airside inspections: to be developed*)

6.9.6 Chapter 3 (*Work in progress: to be developed*)

6.9.7 Chapter 4 (*Foreign object debris (FOD): to be developed*)

6.9.8 Chapter 5 (*Wildlife hazard management: to be developed*)

| *Origin* | *Rationale* |
|---|---|
| PASG/6 | There had been extensive discussions in the ANC as well as comments from States during the consultation process concerning the structure and contents of the first edition of the PANS-Aerodromes. This was mainly attributed to the objective of the first edition which was to address priority issues arising from the USOAP audits. The publication of the first edition contained four chapters that only partly completed the list of subjects identified by the ANC during the establishment of the PANS-Aerodromes Study Group (PASG) for inclusion in the PANS-Aerodromes document. Consequently, while the first edition was being progressed, the PASG has continued to develop material for the remaining chapters.<br><br>The upcoming materials concerning aerodrome operational management being developed by the PASG is in line with the intent of a PANS document in that it provides material for the day-to-day operation of an aerodrome. It became clear while developing the material that flexibility was needed – as no two aerodromes were alike – to allow aerodromes operators and States to adopt and implement the processes and procedures described in the document. In developing this material the PASG members were cognisant of the statement |

| | |
|---|---|
| | by a Commissioner at the inception of the PASG that "given the wide range of aerodromes, defined procedures applicable to all airports would be rare but that the development of some basic principles would be possible." The members therefore developed a structure at PASG/5 to be applied during the development of further material that took into consideration the statement above. The "basic principles" are reflected in the objectives section that obligates the owner to meet the requirement. This is, however, at a high level and achievable by aerodrome operators and States alike. The "Operational Practices" section gives the reader the current good practice used by aerodromes and States to meet the objectives.<br><br>PASG discussed two options of presenting the new material to support the new framework, i.e. splitting into: a) two different Volumes or b) two Parts within the same document. It was eventually agreed to adopt option b), i.e. the PANS-Aerodromes remaining one document but sub-divided into parts. The first part contains the first edition with original four chapters and the second part with materials concerning day-to-day aerodrome operational matters. A further benefit of splitting the document into parts is the ability to begin the second part with Chapter 1 and add to the part without disruption to the first part. This is generally in line with current practice in *Procedures for Air Navigation Services — Aircraft Operations* (Doc 8168). Option a) was rejected as a PANS-Aerodromes, Part II might be misconstrued as procedures associated with Annex 14 — *Aerodromes*, Volume II — *Heliports*. |

**INITIAL PROPOSAL 2**

*Editorial Note.*— Part II is all new text.

## PART II – AERODROME OPERATIONAL MANAGEMENT

## Chapter 1
## GLOBAL REPORTING FORMAT USING STANDARD RUNWAY CONDITION REPORT

### 1.1 RUNWAY SURFACE CONDITION ASSESSMENT AND REPORTING

#### 1.1.1 General

*Note.— This section includes an introduction to each of the topics covered in subsequent sections. It also provides an overview of the general principles in order to understand the procedures that follow.*

1.1.1.1 Assessing and reporting the condition of the movement area and related facilities is necessary in order to provide the flight crew with the information needed for safe operation of the aeroplane. The runway condition report (RCR) is used for reporting assessed information.

| *Origin* | *Rationale* |
|---|---|
| FTF, PASG | FTF/14 (5 to 8 November 2014) and AOSWG/14 (7 to 9 November 2014) agreed to use the term ADCON (aerodrome condition) for the new global reporting format. AIS-AIMSG/10 (10 to 14 November 2014), however, decided to maintain the term SNOWTAM for the dissemination of the new global reporting format for the interim period until such time as the AIS is transformed to AIM together with the restructuring of Annex 15. The term "runway condition report" (RCR) is used in Annex 14, Volume I and in the PANS-Aerodromes until such time a new term/acronym can be mutually agreed with Annex 15. |

1.1.1.2 On a global level, movement areas are exposed to a multitude of climatic conditions and consequently a significant difference in the condition to be reported. The RCR describes a basic structure applicable for all these climatic variations. Assessing runway surface conditions rely on a great variety of techniques and no single solution can apply to every situation.

*Note.— Guidance on methods of assessing runway surface condition is given in Attachment A – Assessment Methods.*

1.1.1.3 The philosophy of the RCR is that the aerodrome operator assesses the runway surface conditions whenever water, snow, slush, ice or frost are present on an operational runway. From this assessment, a runway condition code (RWYCC) and a description of the runway surface are reported which can be used by the flight crew for aeroplane performance calculations. This format, based on the type, depth and coverage of contaminants, is the best assessment of the runway surface condition by the aerodrome operator; however, all other pertinent information will be taken into consideration and be kept up to date and changes in conditions reported without delay.

1.1.1.4 The RWYCC reflects the runway braking capability as a function of the surface conditions. With this information, the flight crew can derive, from the performance information provided by the aeroplane manufacturer, the necessary stopping distance of an aircraft on the approach under the prevailing conditions.

1.1.1.5 The operational requirements in 1.1.1.3 stems from Annex 6 — *Operation of Aircraft*, Part I — *International Commercial Air Transport — Aeroplanes* and Annex 8 — *Airworthiness of Aircraft* with the objective to achieve the desired level of safety for the aeroplane operations.

1.1.1.6 Annex 14, Volume I contains high-level SARPs related to the assessment and reporting of runway surface condition. Associated objectives and operational practices are described in 1.1.2 and 1.1.3 below.

1.1.1.7 The operational practices are intended to provide the information needed to fulfil the syntax requirements for dissemination and promulgation specified in Annex 15 — *Aeronautical Information Services* and the *Procedures for Air Navigation Services — Air Traffic Management* (PANS-ATM, Doc 4444).

*Note.— For practical reasons, the RCR information string has been provisionally incorporated in Annex 15 as a revision of the SNOWTAM format.*

1.1.1.8 When the runway is wholly or partly contaminated by snow, slush, ice or frost, or is wet associated with the clearing or treatment of snow, slush, ice or frost, the runway condition report is disseminated through the AIS and ATS services. When the runway is wet, not associated with the presence of snow, slush, ice or frost, the assessed information is disseminated using the runway condition report through the ATS only.

*Note.— Operationally relevant information concerning taxiways and aprons are covered in the situational awareness section of the RCR.*

| *Origin* | *Rationale* |
|---|---|
| FTF, PASG | FTF/13 proposed procedures for when to report a contaminated runway and when to report a wet runway.<br><br>A contaminated runway will be reported using the full runway condition report and disseminated through AIS and ATS. For wet conditions only, it was proposed to use only ATS for dissemination. Reason: Limit the volume of reports to the amount necessary for safe operations and not create unnecessary burden on all stakeholders. Limited to ATS only to achieve the above in a timely manner.<br><br>To issue a full runway condition report as the runway is drying up from a wet condition only (no snow, slush ice or frost present) would place an unrealistic burden on the aerodrome operator and the current network for dissemination. |

1.1.1.9 The operational practices describe procedures to meet the operationally needed information for the flight crew and dispatchers for the following sections:

a) aeroplane take-off and landing performance calculations:

   i) dispatch – pre-planning before commencement of flight:

      – take off from a runway; and
      – landing on a destination aerodrome or an alternate aerodrome

   ii) in flight – before landing on a runway;

b) situational awareness of the surface conditions on the taxiways and aprons.

**INITIAL PROPOSAL 3**

### 1.1.2 Objectives

*Note.— This section contains the basic principles that have been defined for the topic and have been formulated as required for global uniform application. They cover the whole subject matter and are broken down into the individual subsections.*

1.1.2.1 The RWYCC shall be reported for each third of the runway assessed.

1.1.2.2 The assessment process shall include:

a) assessing and reporting the condition of the movement area;

b) providing the assessed information in the correct format; and

c) reporting significant changes without delay.

1.1.2.3 The information to be reported shall be compliant with the RCR which consists of:

a) aeroplane performance calculation section; and

b) situational awareness section.

1.1.2.4 The information shall be included in an information string in the following order using only AIS compatible characters.

a) aeroplane performance calculation section:

i) aerodrome location indicator;
ii) date and time of assessment;
iii) lower runway designation number;
iv) RWYCC for each runway third;
v) per cent coverage contaminant for each runway third;
vi) depth of loose contaminant for each runway third;
vii) condition description for each runway third; and
viii) width of runway to which the RWYCCs apply if less than published width.

| *Origin* | *Rationale* |
|---|---|
| FTF, PASG | Rationale for 1.1.2.4 a) viii):<br><br>CLEARED RWY WIDTH was changed at FTF/13 to WIDTH OF RUNWAY TO WHICH THE RWYCCs APPLY to avoid use of the word CLEARED.<br><br>CLEARED can be understood differently depending upon the context it is used in and can be a source for misunderstanding with potential impact upon safety. Rationale for not including “cleared length” in the runway condition report (RCR).<br><br>During a winter event, an aerodrome may decide, for tactical reasons, not to clear the entire width and length of a runway of contaminants before reopening it to flight operations. Whenever less than the full length of declared distances published in the AIP for a particular runway is available, aerodromes must inform both aircraft operators and flight crew. If such changes are due to work in progress, the changes to the declared distances are published to the community by NOTAM. Winter events can by their nature be very dynamic and the aerodrome operator may have to adjust his clearing activity to operational constraints without advance notice.<br><br>While information on reduced width can be easily understood and used by the flight crew in their decision making, reduced length can have very different |

| | |
|---|---|
| | implications depending on where the uncleared parts are located on the full length runway.<br><br>Consequently, in case a portion at one or both end(s) of the runway is made unavailable to operations due to lack of contaminant clearing, giving the pilot all the information required for a correct take-off assessment would require updated TORA, TODA, ASDA and obstacle information, which might be complex to generate for the runway inspectors within their tactical environment. It is thus considered that changes to available runway length should be published by NOTAM rather than in the RCR. Reduction of runway length available will be indicated in the situational awareness section of the RCR which will alert the flight crew that declared distances have been modified. |

b) situational awareness section:

i) reduced runway length;
ii) drifting snow on the runway;
iii) loose sand on the runway;
iv) chemical treatment on the runway;
v) snowbanks on the runway;
vi) snowbanks on taxiway;
vii) snowbanks adjacent to the runway;
viii) taxiway conditions;
ix) apron conditions;
x) State approved and published use of measured friction coefficient;
xi) plain language remarks.

| *Origin* | *Rationale* |
|---|---|
| FTF, PASG | The information above is listed in descending order of importance to pilots. |

1.1.2.5 The syntax for dissemination as described in the RCR template in Annex 15, Appendix 2 is determined by the operational need of the flight crew and the capability of trained personnel to provide the information arising from an assessment.

*Note.— For practical reasons, the RCR information string has been provisionally incorporated in Annex 15 —* Aeronautical Information Services *as a revision of the SNOWTAM format.*

| *Origin* | *Rationale* |
|---|---|
| FTF, PASG | The mechanism for arriving at the format of the information to be provided to the flight crew and thereby the syntax provided in Annex 15, Appendix 2 is in principle the following:<br><br>a) operational need for flight crew (Annex 6 and Annex 8);<br>b) capability of assessment by trained personnel (Annex 14, Volume I).<br><br>To be operationally meaningful the information must be presented in a format which can easily be used by the flight crew in compliance with operational documentation. The quality of the information is a function of the skill level of the person who assesses the conditions and within the limits of what can be achieved. It should not be |

| | |
|---|---|
| | asked for information that cannot be provided taking into consideration its intended use. The proposed syntax in Annex 15, Appendix 2 and the operational practices as proposed below represent the considered balance on this issue. |

1.1.2.6 The syntax requirement in 1.1.2.5 shall be strictly adhered to when providing the assessed information through the RCR.

| *Origin* | *Rationale* |
|---|---|
| FTF, PASG | The syntax in Annex 15, Appendix 2 and the operational practices, described below, takes into consideration safe operation of the aeroplane and the quality of the assessed information provided. It represents a desired and achievable level of safety provided that the procedures in the RCR as described in the operational practices section below and the syntax in Annex 15, Appendix 2 are strictly adhered to. |

**INITIAL PROPOSAL 4**

### 1.1.3 Operational practices

*Note.— This section covers the specific operational practices and the ways in which they are applied in order to achieve the basic principles defined in 1.1.2 – Objectives.*

1.1.3.1 Reporting, in compliance with the runway condition report, commences when a significant change in runway surface condition occurs due to water, snow, slush, ice or frost.

1.1.3.2 Reporting of the runway surface condition should continue to reflect significant changes until the runway is no longer contaminated. When this situation occurs, the aerodrome will issue a runway condition report that states the runway is wet or dry as appropriate.

1.1.3.3 Annex 14,Volume I considers that a change in the runway surface condition used in the runway condition report is considered significant whenever there is any change in the RWYCC due to;

a) any change in contaminant type;

b) any change in reportable contaminant coverage according to Table 1;

c) any change in contaminant depth according to Table 2; and

d) any other information, for example a pilot report of runway braking action, which according to assessment techniques used, are known to be significant.

***Runway Condition Report – Aeroplane performance calculation section***

1.1.3.4 The aeroplane performance calculation section is a string of grouped information separated by a space “ ” and ends with a return and two line feed “≪≡”. This is to distinguish the aeroplane performance calculation section from the following situational awareness section or the following aeroplane performance calculation section of another runway.

The information to be included in this section consists of the following.

a) **Aerodrome location indicator**: a four-letter ICAO location indicator in accordance with Doc 7910, *Location Indicators*.

This information is mandatory.

Format: nnnn
Example: ENZH

b) **Date and time of assessment**: date and time (UTC) when the assessment was performed by the trained personnel.

This information is mandatory.

Format: MMDDhhmm
Example: 09111357

| *Origin* | *Rationale* |
|---|---|
| FTF, PASG | The YYYY group has been deleted. It was proposed by AIS-AIMSG Ad-hoc Group that including the year (YYYY) in the serial number for the RCR (COM heading) would be more unique. As the YYYY group is not needed for the flight crew for day-by-day operations and its main purpose is a more technical one for identifying RCRs for historical use (databases). FTF/13 was in favor of the proposal from AIS-AIMSG Ad-hoc Group. |

c) **Lower runway designation number**: a two or three character identifying the runway for which the assessment is carried out and reported.

This information is mandatory.

Format: nn[L] or nn[C] or nn[R]
Example: 09L

d) **Runway condition code for each runway third**: a one digit number identifying the RWYCC assessed for each runway third. The codes are reported in a three character group separated by a "/" for each third. The direction for listing the runway thirds shall be in the direction as seen from the lower designation number.

This information is mandatory.

When transmitting information on runway surface condition by ATS to flight crew, the sections are, however, referred to as the first, second or third part of the runway. The first part always means the first third of the runway as seen in the direction of landing or take-off as illustrated in Figures 1 and 2 and detailed in PANS-ATM (Doc 4444).

| *Origin* | *Rationale* |
|---|---|
| FTF, PASG | No change to existing procedures. For the purpose of reporting runway surface condition information to aeronautical service units, reporting by runway third is always from the lower designation number to the upper as currently required for SNOWTAM and in the landing direction from ATC to pilots. |

Format: n/n/n
Example: 5/5/2

*Note 1.— A change in RWYCC from, say, 5/5/2 to 5/5/3 is considered significant. (See further examples below).*

*Note 2.— A change in RWYCC requires a complete assessment taken into account all information available.*

*Note 3.— Procedures for assigning a RWYCC are available in 1.1.3.12 to 1.1.3.16.*

e) **Per cent coverage contaminant for each runway third**: a number identifying the percentage coverage. The percentages are to be reported in an up to nine character group separated by a "/" for each runway third. The assessment is based upon an even distribution within the runway thirds using the guidance in Table 1.

This information is conditional. It is not reported for one runway third if it is dry or covered with less than 10 per cent.

| | | |
|---|---|---|
| Format: | [n]nn/[n]nn/[n]nn | |
| Example: | 25/50/100 | |
| | /50/100 | if contaminant coverage is less than 10% in the first third |
| | 25//100 | if contaminant coverage is less than 10% in the middle third |
| | 25/50/ | if contaminant coverage is less than 10% in the last third |

With uneven distribution of the contaminants additional information is to be given in the plain language remark part of the Situational awareness section of the global reporting format. Where possible a standardized text should be used.

| *Origin* | *Rationale* |
|---|---|
| FTF, PASG | With uneven distribution (less than 100 per cent) there is a need to give additional information in the plain language section describing the location of the contaminant. |

f) **Depth of loose contaminant; dry snow, wet snow, slush or standing water for each runway third**: a two or three digit number representing the assessed depth (mm) of the contaminant for each runway third. The depth is reported in a six to nine character group separated by a "/" for each runway third as defined in Table 2. The assessment is based upon an even distribution within the runway thirds as assessed by a trained person. If measurements are included as part of the assessment process, the reported values are still reported as assessed depths as the trained person has placed his judgment upon the measured depths to be representative for the runway third.

| | | |
|---|---|---|
| Format: | [n]nn/[n]nn/[n]nn | |
| Examples: | 04/06/12 | *[STANDING WATER]* |
| | 02/04/09 | *[SLUSH]* |
| | 02/05/10 | *[WET SNOW or WET SNOW ON TOP OF ...]* |
| | 02/20/100 | *[DRY SNOW or DRY SNOW ON TOP OF]* |

This information is conditional. It is reported only for DRY SNOW, WET SNOW, SLUSH and STANDING WATER.

***Example of reporting depth of contaminant whenever there is a significant change***

1) After the first assessment of runway condition, a **first runway condition report** is generated. The initial report is:

   5/5/5 100/100/100 02/02/02 SLUSH/SLUSH/SLUSH

   *Note .— The full information string is not used in this example.*

2) With continuing precipitation, a new runway condition report is required to be generated as subsequent assessment reveals a change in the runway condition code. A **second runway condition report** is therefore created as:

   2/2/2 100/100/100 03/03/03 SLUSH/SLUSH/SLUSH

3) With even more precipitation, further assessment reveals the depth of precipitation has increased from 3 mm to 5 mm along the entire length of the runway. However, a new runway condition report **is not** required because the runway condition code has not change (change in depth is less than the significant change threshold of 3 mm).

4) A final assessment of the precipitation reveals that the depth has increased to 7 mm. A new runway condition code is required because the change in depth from the last runway condition report (**second runway condition code**) i.e. from 3 mm to 7 mm is greater than the significant change threshold of 3 mm. A **third runway condition report** is thus created as below:

   2/2/2 100/100/100 07/07/07 SLUSH/SLUSH/SLUSH

   For contaminants other than STANDING WATER, SLUSH, WET SNOW or DRY SNOW, the depth is not reported. The position of this type of information in the information string is then identified by //. Example: //

| *Origin* | *Rationale* |
|---|---|
| FTF, PASG | By including "//" the flight crew will positively be made aware that information has not been provided. The operational need as identified by IFALPA was found and inclusion of // was agreed upon at FTF/13.<br><br>The interpretation of the // in the runway condition report would be:<br><br>*No depth reported as there is no depth to report; sequential order of depth information in the information string identified.* |

When the depth of the contaminants varies significantly within a runway third, additional information is to be given in the plain language remark part of the *Situational awareness section* of the global reporting format.

*Note.— Significantly in this context is a variation in depth more than twice the depth indicated in column 3 of Table 2 in the lateral direction. Further information is available in Circular 329.*

| *Origin* | *Rationale* |
|---|---|
| FTF, PASG | The value is to be representative for a depth assessment of a RWY third. To report on an uncertainty/accuracy of 1 mm does not seem to be appropriate even though historical reports do show depths over the full range. The nature of the contaminants does not support such a degree of accuracy/uncertainty either.<br><br>**Definition of "depth threshold between wet and contaminated"**. The FTF was faced with the issue of deciding whether the threshold value of 3 mm depth was to be included in the definition of "wet runway" or in the definition of "standing water".<br><br>There have been conflicting practices under EASA and FAA regulations. EASA regulations already require contaminated runway performance data to be published under CS25.1591. The acceptable means of compliance (AMC) to this rule state that it applies only to standing water or slush depth in excess of 3 mm, considering 3 mm and below as a wet runway. On the other hand, in publishing the rules for runway condition reporting in the field condition report (FICON), the FAA decided to consider the threshold value of 1/8 inch (approx. 3 mm) depth as contaminated.<br><br>After the last winter trial validation meeting, an e-mail discussion occurred between the TALPA ARC Part 25 group members regarding this threshold. The manufacturers of small/low wing aircraft, but also Boeing, had generally historically published contaminated runway performance for 1/8 inch of water (roughly equal to 3 mm). Boeing explained that a since retired FAA AC had stated that aquaplaning could occur even at very small water depths, as low as 1/10 inch. Boeing's original threshold was 0.08 in (2 mm). Boeing adopted 3 mm because that was the JAA AMJ 25X1591 standard and operators requested the information to be able to interpolate between 3 mm and 6 mm. The reasoning of the other manufacturers was mostly that the penalty of contaminant drag was so large that they needed this level of performance to avoid excess penalty when 3 mm was reported (versus forcing operators to use performance information published established for ¼ inch of water) and at the same time considered that using wet runway performance for 3mm of reported depth was unduly optimistic.<br><br>Airbus had published information for ¼ and ½ inch only because it did not seem appropriate to optimize the last kg of performance limited take-off weight on contaminated runways, since the reporting accuracy did not really justify taking advantage of a small difference of 3 mm, and because the penalty in terms of drag was not considered to have a large operational impact.<br><br>During the Annex 6 and 8 subgroup's phone call on 2/8/2013, the subgroup decided, in line with the outcome of the e-mail exchange mentioned above, to define wet as "water depth less than 3 mm" and contaminated as "3 mm and above". This was adopted by the FTF as a whole and was reflected by the definitions that were included in the proposal for Annex 14 that were adopted by AP/3. To support this position clarifications in the PANS-Aerodromes or other appropriate document for situations where the assessed water depth equals to 3 mm, will be developed. |

| | |
|---|---|
| | 3 mm depth WET or CONTAMINATED. The issue of the 3 mm depth threshold value discriminating between wet or contaminated runway is discussed above. At the end following was agreed upon and proposed by FTF:<br><br>WET less than 3 mm<br>CONTAMINATED 3 mm and above<br><br>Even after this clarification, the issue of reporting 3 mm threshold value caused lengthy and in depth discussions within FTF. From an aerodrome perspective, when assessing depth representative for a runway third, the discussions has been academic (partly tied up to inches vs. mm) and far removed from the actual assessment process on an operative runway. It turned out to be difficult to report or use the actual 3 mm value as a reported value.<br><br>At the end a decision had to be taken on how to move forwards and at FTF/13 it was decided to propose to report the value below (2 mm) and the value above (4 mm) as identified.<br><br>Again, from an aerodrome perspective when assessing depth representative for a runway third, this level of accuracy/uncertainty is still questionable.<br><br>At FTF/13 the aeroplane manufacturers made known the impact of 1 mm difference upon weight penalty. This was considerable and implies that the sensitivity to aeroplane performance relative to contaminant depth is considerable and not in line with what can reasonably be achieved taking into consideration the size of the assessed surfaces and the nature of contaminants as they appear on an operational runway.<br><br>However, at FTF/13 and as a compromise, the proposed 2 mm and 4 mm was agreed upon and implemented in two proposed method for reporting.<br><br>A third method was proposed by aeroplane manufacturers at an FTF workshop in London and agreed upon at FTF/14 and included in the proposals.<br><br>At FTF/14 the proposed definitions were reviewed as they appear in the AP/3 report on Agenda Item 4, Appendix D (proposed amendments to Annex 14, Volume I). It was then concluded that the statement 3 mm = 1/8 inch = contaminated was a true statement and that 3 mm was a reportable value.<br><br>One should bear in mind that whatever threshold value agreed upon there will always be the significant change that « completely changes the assumptions used in the performance computations » when this threshold value is passed. |

g) **Condition description for each runway third**: to be reported in capital letters using terms specified in paragraph 2.9.5 in Annex 14, Volume I. These terms have been harmonized with the terms used in the Standards and Recommended Practices in Annexes 6, 8, 11 and 15. The condition type is reported by any of the following condition type description for each runway third and separated by an oblique stroke "/".

This information is mandatory.

DRY
WET ICE
WATER ON TOP OF COMPACTED SNOW
DRY SNOW
DRY SNOW ON TOP OF ICE
WET SNOW ON TOP OF ICE
ICE
SLUSH
STANDING WATER
COMPACTED SNOW
WET SNOW
DRY SNOW ON TOP OF COMPACTED SNOW
WET SNOW ON TOP OF COMPACTED SNOW
WET
FROST

Format: nnnn/nnnn/nnnn
Example: DRY SNOW ON TOP OF COMPACTED SNOW/WET SNOW ON TOP OF COMPACTED SNOW/WATER ON TOP OF COMPACTED SNOW

| *Origin* | *Rationale* |
|---|---|
| FTF, PASG | The operational requirements as identified by IFALPA requested to have the information presented to the flight crew in plain text, taking into consideration human factors and also that the length of the text did not represent a problem and in most cases was only a minor gain with respect to length of text to be disseminated. |

h) **Width of runway to which the RWYCCs apply if less than published width** is the two digit number representing the width of cleared runway in metres if less than published width.

This information is optional.

Format: nn
Example: 30

If the cleared runway width is not symmetrical along the centre line, additional information is to be given in the plain language remark part of the situational awareness section of the global reporting format.

***Runway condition report – Situational awareness section:***

1.1.3.5 All individual messages in the situational awareness section end with a full stop sign. This is to distinguish the message from subsequent message(s).

The information to be included in this section consists of the following:

a) **Reduced runway length**

This information is conditional when a NOTAM has been published with a new set of declared distances.

Format: Standardized fixed text
RWY nn [L] or nn [C] or nn [R] REDUCED TO [n]nnn
Example: RWY 22L REDUCED TO 1450.

| *Origin* | *Rationale* |
|---|---|
| FTF, PASG<br>AIS-AIMSG | At AIS-AIMSG/10, it was clarified that BY NOTAM had to be deleted as a NOTAM could not refer to another NOTAM. (The runway condition report is a special series of NOTAM.)<br><br>It is proposed to remove BY NOTAM as strongly suggested by AIS-AIMSG/10 and keep the information as *conditional information*.<br><br>Further to this, the declaration of a reduced available runway length by the aerodrome due to lack of winter contaminant clearing is a rare event. Whenever the contamination distribution is uneven along the runway length, the type and depth of the contaminants are reported for each third of the total runway length, i.e. the length available by construction and applicable NOTAMs, for example of work in progress, even when the reported conditions for one third are incompatible with the operation of most aircraft. However, when such a situation arises, it has a major impact on the performance assessment and flight crew must be made aware of it. Such information would be disseminated on the ATIS, but that is available only once the aircraft is within VHF range. The intent is for the latest RCR to be available at any point during the flight. To allow dissemination of the information required for a correct take-off performance computation, a specific NOTAM is required. The intent of the proposed standard text for this item is to remind the crew that this later NOTAM must be considered for take-off.<br><br>*Note.— See also rationale box to paragraph 1.1.2.4.* |

b) **Drifting snow on the runway**

This information is optional.

Format: Standardized fixed text
Example: DRIFTING SNOW.

c) **Loose sand on the runway**

This information is optional.

Format: RWY nn[L] or nn[C] or nn[R] LOOSE SAND
Example: RWY 02R LOOSE SAND.

| *Origin* | *Rationale* |
|---|---|
| FTF, PASG | Rationale for only reporting LOOSE SAND and not SANDED in the RCR.<br><br>There is a possibility that LOOSE SAND may be ingested into engines when using reversers. For this reason, it is proposed that LOOSE SAND be included |

| | |
|---|---|
| | in the situational awareness section.<br><br>The effect of sanding a RWY is to be incorporated in the RWYCC assessment where applicable. The effect of sanding on the safety of aeroplane operations is questionable and research does not give a uniform answer to this effect and is difficult to distinguish in recorded aeroplane performance data. Where applicable, reporting of sanding must consequently be clarified at a State level as it might apply to various methods/techniques of sanding.<br><br>Loose sand on the runway gets easily displaced by aeroplane landing and taking off. The effect of applied sand might for the same reason is very time-limited.<br><br>For this reason, the term SANDING TREATMENT was removed from the situational awareness section and replaced by LOOSE SAND ON THE RUNWAY.<br><br>It also implies that if applied SAND shall be given operational significance when used at the RWY it has to be used according to criteria set or agreed by the State. |

d) **Chemical treatment on the runway**

This information is mandatory.

Format: RWY nn[L] *or* nn[C] *or* nn[R] CHEMICALLY TREATED.
Example: RWY 06 CHEMICALLY TREATED.

e) **Snowbanks on the runway**

This information is optional.
Left or Right distance in metres from centerline.

Format: RWY nn[L] *or* nn[C] *or* nn[R] SNOWBANK Lnn *or* Rnn *or* LRnn FM CL
Example: RWY 06L SNOWBANK LR19 FM CL.

f) **Snowbanks on taxiway**

This information is optional.
Left or Right distance in metres from centerline.

Format: TWY [nn]n SNOWBANK Lnn *or* Rnn *or* LRnn FM CL
Example: TWY A SNOWBANK LR20 FM CL.

g) **Snowbanks adjacent to the runway** penetrating level/profile set in the aerodrome snow plan.

This information is optional.

Format: RWY nn[L] *or* nn[C] *or* nn[R] ADJACENT SNOWBANKS.
Example: RWY 06R ADJACENT SNOWBANKS.

h) **Taxiway conditions**

This information is optional.

Format: TWY [nn]n POOR.
Example: TWY B POOR.

i) **Apron conditions**

This information is optional.

Format: APRON [nnnn] POOR.
Example: APRON NORTH POOR.

j) **State approved and published use of measured friction coefficient**

This information is optional.

Format: *[State set format and associated procedures]*
Example: *[Function of State set format and associated procedures]*

k) **Plain language remarks** using only allowable characters in capital letters.
Where possible, standardized text should be developed.

This information is optional.

Format: Combination of allowable characters where use of full stop « . » marks the end of message.

Allowable characters:
A B C D E F G H I J K LM N O P Q R S T U V W X Y Z
0 1 2 3 4 5 6 7 8 9
/ [oblique stroke] "." [period]" " [space]

***Complete information string***

1.1.3.6 An example of a complete information string prepared for dissemination is as follows:

*[COM header and Abbreviated header]* (Completed by AIS)
111403 EUECYIYN
(S1234/14 NOTAMR S1233/14
Q) ENOR/QMA??/IV/NBO/A/000/999/5812N00805E005
A) ENZH B) 1309111403 C) 1309121403EST

*[Aeroplane performance calculation section]*
ENZH 09111400 09L 6/3/2 25/50/50 02/05/02 DRY SNOW ON TOP OF COMPACTED SNOW/WET SNOW ON TOP OF COMPACTED SNOW/WATER ON TOP OF COMPACTED SNOW 30.

*[Situational awareness section]*
LDA RWY 22 REDUCED TO 1450. DRIFTING SNOW. RWY 09 LOOSE SAND. RWY 09 CHEMICALLY TREATED. RWY 09 SNOWBANK LR 19 FROM CL. RWY 06 ADJACENT SNOWBANKS. TWY B POOR. APRON NORTH POOR.

***Assessing a runway and assigning a runway condition code***

1.1.3.7 The assessed RWYCC to be reported for each third of the runway is determined by following the procedure described in paragraph 1.1.3.12 to paragraph 1.1.3.16.

*Note.— Guidance on methods of assessing runway surface condition is given in Attachment A.*

1.1.3.8 If 25 per cent or less area of a runway third is wet or covered by contaminant, a RWYCC 6 shall be reported.

| *Origin* | *Rationale* |
|---|---|
| FTF, PASG | Contaminated runway – entry point for use of RCAM<br><br>The proposed procedure on reporting RWY thirds has been the current practice in the SNOWTAM. The FAA TALPA ARC implementation procedure uses the 25 per cent criteria on the full length of the runway.<br><br>For this reason the ICAO procedure, in line with existing SNOWTAM procedure, is more conservative than the proposed FAA procedure. |

1.1.3.9 If the distribution of the contaminant is not uniform, the location of the area that is wet or covered by the contaminant is described in the plain language remark part of the Situational awareness section of the global reporting format.

1.1.3.10 A description of the runway surface condition is provided using the contamination terms described in capital letters in Table 3 Assigning a runway condition code.

1.1.3.11 If multiple contaminants are present where the total coverage is more than 25 per cent but no single contaminant covers more than 25 per cent of any runway third, the RWYCC is based upon the judgment by a trained person, considering what contaminant will most likely be encountered by the aeroplane and its likely effect on the aeroplane's performance.

1.1.3.12 The RWYCC is determined using Table 3.

1.1.3.13 The variables, in Table 3, that may affect the runway condition code are:

a) type of contaminant;

b) depth of contaminant; and

c) outside air temperature. Where available the runway surface temperature should preferably be used.

*Note.— At air temperatures of +3°C and below, with a dew point spread of 3ºC or less, the runway surface condition may be more slippery than indicated by the runway condition code assigned by Table 3. The narrow dew point spread indicates that the air mass is relatively close to saturation which is often associated with actual precipitation, intermittent precipitation, nearby precipitation or fog.*

*This may depend on its correlation with precipitation but it may also, at least in part, depend on the exchange of water at the air-ice interface. Due to the other variables involved such as surface*

*temperature, solar heating and ground cooling or heating, a small temperature spread does not always mean that the braking action will be more slippery. The observation should be used by aerodrome operators as an indicator of slippery conditions but not as an absolute.*

1.1.3.14 An assigned RWYCC 5, 4, 3 or 2 shall not be upgraded.

| *Origin* | *Rationale* |
|---|---|
| FTF, PASG | The concept of not upgrading an assigned RWYCC stems from the TALPA ARC approach and the way the Runway Condition Assessment Matrix (RCAM) is constructed. (See Table 3 and Table 5).<br><br>Citation from TALPA ARC recommendations:<br><br>"…. As the basis for performing runway condition assessments by airport operators and for interpreting the reported runway conditions by pilots in a standardized format based on airplane performance data supplied by airplane manufacturers for each of the stated contaminant types and depths. The concept attempts, to maximum extent feasible, to replace subjective judgements of runway conditions with objective assessments which are tied directly to contaminant type and depth categories, which have been determined by airplane manufacturers to cause specific changes in the airplane braking performance. …"<br><br>Aeroplane manufacturers used all information/data available to them and integrated the conservatism needed when establishing the relationships. Part of this conservatism is procedural when assessing and reporting and one procedure is not to upgrade an assigned RWYCC 5, 4, 3 or 2. |

1.1.3.15 An assigned RWYCC 1 or 0 can be upgraded using the following procedures (but see 1.1.3.16 below):

a) if a properly operated and calibrated State-approved measuring device and all other observations supports a higher RWYCC as judged by a trained person;

b) the decision to upgrade RWYCC 1 or 0 cannot be based upon one assessment method alone. All available means of assessing runway slipperiness are to be used to support the decision;

c) when RWYCC 1 or 0 is upgraded, the runway surface is assessed frequently during the period the higher RWYCC is in effect to ensure that the runway surface condition does not deteriorate below the assigned code; and

d) variables that may be considered in the assessment that may affect the runway surface condition, include but are not limited to:

   i) any precipitation conditions;

   ii) changing temperatures;

   iii) effects of wind;

   iv) frequency of runway in use; and

v) type of aeroplane using the runway.

1.1.3.16 Upgrading of RWYCC 1 or 0 using the procedures in 1.1.3.15 shall not be permitted to go beyond a RWYCC 3.

1.1.3.17 If sand or other runway treatments are used to support upgrading, the runway surface is assessed frequently to ensure the continued effectiveness of the treatment.

1.1.3.18 Where available, the pilot reports of runway braking action should be taken into consideration as part of the ongoing monitoring process, using the following principle:

a) a pilot report of runway braking action is taken into consideration for downgrading purposes; and

b) a pilot report of runway braking action can be used for upgrading purposes only if it is used in combination with other information qualifying for upgrading.

*Note 1.— The procedures for making special air-reports regarding runway braking action are contained in the* Procedures for Air Navigation Services — Air Traffic Management *(PANS-ATM, Doc 4444), Chapter 4, and Appendix 1, Instructions for air-reporting by voice communication.*

*Note 2.— Procedures for downgrading reported RWYCC can be found in 1.1.3.22 and 1.1.3.23 including the use of Table 5 runway condition assessment matrix (RCAM).*

| *Origin* | *Rationale* |
|---|---|
| FTF, PASG | It is intended that pilot report of runway braking action should only be used for downgrading purposes. However, this was felt to be too conservative and FTF agreed to upgrade, based on certain specific conditions, was introduced for the lower RWYCC as described in the procedures.<br><br>The principle is that a certain amount of conservatism, based upon all the historic information/knowledge of the aeroplane manufacturers, is built into the assignment of RWYCC and that pilot report of runway braking action should not be used to bypass this conservatism. However, it was recognized that this could turn out to be too conservative for the lower end of the assigned RWYCC and consequently an upgrading mechanism was introduced.<br><br>This approach provided the aerodrome operator with a tool for taking into account all the information available including the outcome of maintenance/preparation actions performed by the aerodrome operator. However, at the higher end of RWYCC, it was not approved to upgrade the assigned RWYCC since this would bypass the conservatism established by the aeroplane manufacturers and which they considered as necessary based upon all information available to them. |

1.1.3.19 Two consecutive pilot reports of runway braking action of less than RWYCC 2 shall trigger an assessment.

| *Origin* | *Rationale* |
|---|---|
| FTF, PASG | Takes into consideration that POOR can be reported by an inexperienced pilot. |

| | |
|---|---|
| | However, when two consecutive pilots reports POOR then a new assessment is required as there most probably has been a significant change in the runway surface conditions. |

1.1.3.20 One pilot report of runway braking action of LESS THAN POOR shall suspend operations on that runway and a new assessment shall be undertaken.

*Note.— If considered appropriate, maintenance activities may be performed simultaneously or before a new assessment is made.*

1.1.3.21 Table 4 shows the correlation of pilot reports of runway braking action with RWYCCs.

| *Origin* | *Rationale* |
|---|---|
| FTF, PASG | When a pilot reports LESS THAN POOR, operations on the runway are suspended since very slippery condition is being experienced. A new assessment must be performed to either verify this and initiate appropriate maintenance activities or issue an updated RCR. |

1.1.3.22 The combined Table 3 and Table 4 form the runway condition assessment matrix (RCAM) in Table 5. The RCAM is a tool to be used in compliance with the associated procedures of which there are two main parts:

a) assessment criteria; and

b) downgrade assessment criteria.

1.1.3.23 The RCAM is a central tool to be used when assessing runway surface conditions; however, it is not a standalone document but must be used in compliance with associated procedures as specified in this chapter.

| *Origin* | *Rationale* |
|---|---|
| FTF, PASG | The RCAM in the proposed runway condition report format differ from the FAA TALPA ARC implementation version. The FAA version identifies use of friction measurements with an overlapping scale for downgrading the RWYCC. The FAA version also differs in other details by not using metric units and in some terms. |

## 1.2 AERODROME MOVEMENT AREA MAINTENANCE

*(Guidance on surface friction characteristics and State's responsibility including examples of States' good practices are currently being developed.)*

**INITIAL PROPOSAL 5**

## LIST OF TABLES AND FIGURES

**Table 1 – Percentage of coverage for contaminants**

| Assessed per cent | Reported per cent |
|---|---|
| 10– 25 | 25 |
| 26 – 50 | 50 |
| 51 – 75 | 75 |
| 76 – 100 | 100 |

**Table 2 – Depth assessment for contaminants**

| **Contaminant** | **Valid values to be reported** | **Significant change** |
|---|---|---|
| STANDING WATER | 03, then assessed value | 3 mm up to and including 15 mm |
| SLUSH | 02, then assessed value | 3 mm up to and including 15 mm |
| WET SNOW | 02, then assessed value | 5 mm |
| DRY SNOW | 02, then assessed value | 20 mm |

**Table 3 – Assigning a runway condition code (RWYCC)**

| Runway condition description | Runway condition code (RWYCC) |
|---|---|
| **DRY** | **6** |
| **FROST**<br>**WET** (The runway surface is covered by any visible dampness or water less than 3 mm deep.<br>**SLUSH** (less than 3 mm depth)<br>**DRY SNOW** (less than 3 mm depth)<br>**WET SNOW** ( less than 3 mm depth) | **5** |
| **COMPACTED SNOW**<br>(Minus 15°C and lower outside air temperature) | **4** |
| **WET** ("Slippery wet" runway)<br>**DRY SNOW** (3 mm and more depth)<br>**WET SNOW** (3 mm and more depth)<br>**DRY SNOW ON TOP OF COMPACTED SNOW** (Any depth)<br>**WET SNOW ON TOP OF COMPACTED SNOW** (Any depth)<br>**COMPACTED SNOW** (Higher than minus 15°C outside air temperature) | **3** |
| **STANDING WATER** (Water of depth equal to or greater than 3 mm.<br>**SLUSH** (3 mm and more depth) | **2** |
| **ICE** | **1** |
| **WET ICE**<br>**WATER ON TOP OF COMPACTED SNOW**<br>**DRY SNOW OR WET SNOW ON TOP OF ICE** | **0** |

**Table 4 – Correlation of runway condition code and pilot reports of runway braking action**

| Pilot report of runway braking action | Description | Runway condition code (RWYCC) |
|---|---|---|
| N/A | | 6 |
| GOOD | Braking deceleration is normal for the wheel braking effort applied AND directional control is normal | 5 |
| GOOD TO MEDIUM | Braking deceleration OR directional control is between good and medium | 4 |
| MEDIUM | Braking deceleration is noticeably reduced for the wheel braking effort applied OR directional control is noticeably reduced | 3 |
| MEDIUM TO POOR | Braking deceleration OR directional control is between medium and poor | 2 |
| POOR | Braking deceleration is significantly reduced for the wheel braking effort applied OR directional control is significantly reduced | 1 |
| LESS THAN POOR | Braking deceleration is minimal to non-existent for the wheel braking effort applied OR directional control is uncertain | 0 |

## Table 5 – Runway condition assessment matrix (RCAM)

| Runway condition assessment matrix (RCAM) | | | |
|---|---|---|---|
| Assessment criteria | | Downgrade assessment criteria | |
| **Runway condition code** | **Runway surface description** | **Aeroplane deceleration or directional control observation** | **Pilot report of runway braking action** |
| **6** | • DRY | --- | --- |
| **5** | • FROST<br>• WET (The runway surface is covered by any visible dampness or water less than 3 mm deep<br><br>***Less than 3 mm depth:***<br>• SLUSH<br>• DRY SNOW<br>• WET SNOW | Braking deceleration is normal for the wheel braking effort applied AND directional control is normal. | GOOD |
| **4** | ***-15ºC and Lower outside air temperature:***<br>• COMPACTED SNOW | Braking deceleration OR directional control is between Good and Medium. | GOOD TO MEDIUM |
| **3** | • WET ("Slippery wet" runway)<br>• DRY SNOW or WET SNOW (Any depth) ON TOP OF COMPACTED SNOW<br>***3 mm and more depth:***<br>• DRY SNOW<br>• WET SNOW<br>***Higher than -15ºC outside air temperature[1]:***<br>• COMPACTED SNOW | Braking deceleration is noticeably reduced for the wheel braking effort applied OR directional control is noticeably reduced. | MEDIUM |
| **2** | ***3 mm and more depth of water or slush:***<br>• STANDING WATER<br>• SLUSH | Braking deceleration OR directional control is between Medium and Poor. | MEDIUM TO POOR |
| **1** | • ICE [2] | Braking deceleration is significantly reduced for the wheel braking effort applied OR directional control is significantly reduced. | POOR |
| **0** | • WET ICE [2]<br>• WATER ON TOP OF COMPACTED SNOW [2]<br>• DRY SNOW or WET SNOW ON TOP OF ICE [2] | Braking deceleration is minimal to non-existent for the wheel braking effort applied OR directional control is uncertain. | LESS THAN POOR |

Runway surface temperature should preferably be used where available.

[2] The aerodrome operator may assign a higher runway condition code (but no higher than code 3) for each third of the runway, provided the procedure in paragraph 1.1.3.15 is followed.

---

[*] As defined in Annex 2.

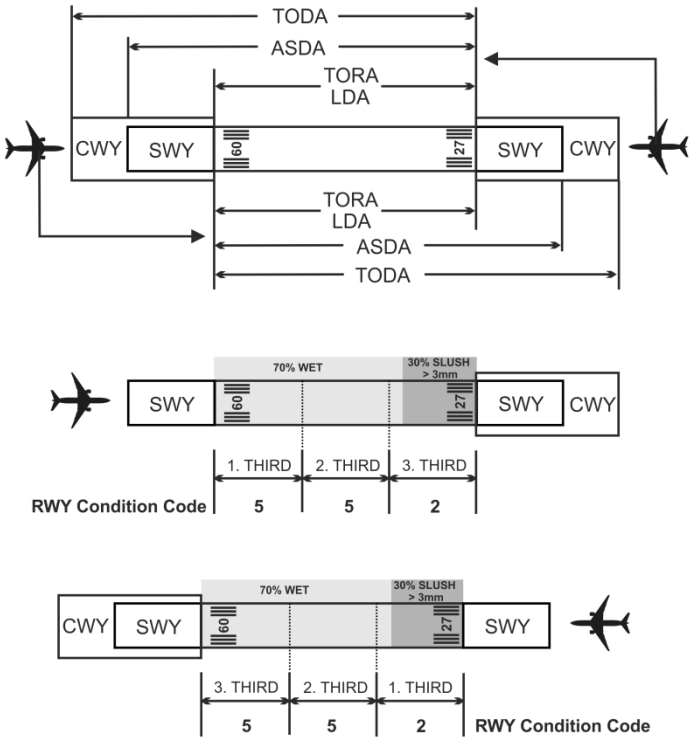


*Figure 1. Reporting of runway condition code from ATS to flight crew for runway thirds*

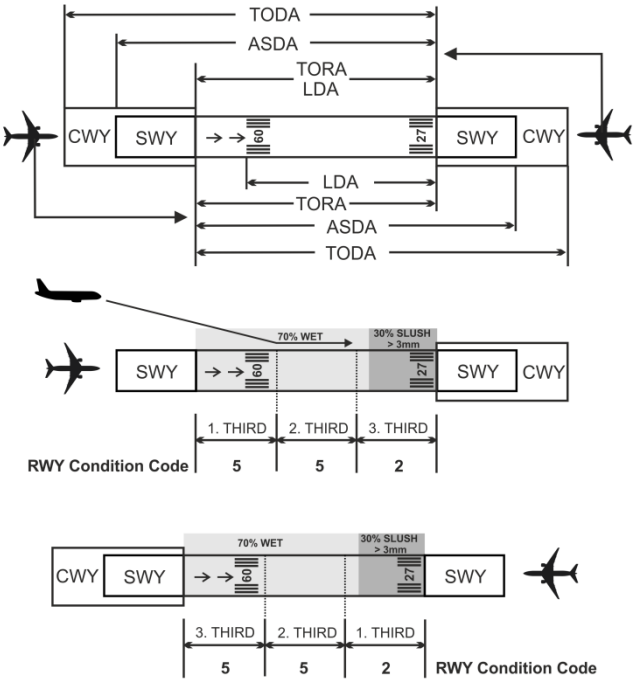


*Figure 2. Reporting of runway condition code for runway thirds from ATS to flight crew on a runway with displaced threshold*

# Attachment A to Chapter 1, Section 1.1

## METHODS OF ASSESSING RUNWAY SURFACE CONDITION

| | | ANNEX 14, Volume I, 6th Edition, July 2013 | REMARK |
|---|---|---|---|
| DESIGN AND CONSTRUCTION | slope | 3.1.13 Longitudinal slopes<br>3.1.19 Transverse slopes | |
| | Texture | 3.1.26 **Recommendation.—**The average surface texture depth of a new surface should be not less than 1.0 mm. | |
| | Minimum friction level set by the State | 3.1.23 A paved runway shall be so constructed as to provide surface friction characteristics at or above the minimum friction level set by the State. | The State set criteria for surface friction characteristics and output from State set or agreed assessment methods form the reference from which trend monitoring are performed and evaluated. |
| | Polishing | 3.1.23 A paved runway shall be so constructed as to provide surface friction characteristics at or above the minimum friction level set by the State. | Polished Stone Value. (PSV-value) is a measure of skidding resistance on a small sample of stone surface, having being subjected to a standard period of polishing. |

| | | | Rubber build-up | Geometry change | Polishing |
|---|---|---|---|---|---|
| ASSESSMENT METHODS FOR MONITIORING TREND OF CHANGE TO SURFACE FRICTION CHARACTERISTICS | Visual - macrotexture | Visual assessment will only give a very crude assessment of the macrotexture. Extensive rubber buil-up can be identified. | X | | |
| | Visual - microtexture | Visual assessment will give a very crude assessment of the microtexture and to what degree the microtexture has been filled and covered by rubber. | X | | |
| | Visual – runway geometry (ponding) | Visual assessment during a rain storm and subsequent drying process of the runway will reveal how the runway drains and if there has been any changes to runway geometry causing ponding. Depth of any pond can be mesured by a ruler or any other appropriate depth measurement method/tool. | | X | |
| | By touch - macrotexture | Assessment „by touch“ can differentiate between degree of loss of texture but not quantifying it. | X | | |
| | By touch - microtexture | Assessment „by touch“ can identify if microtexture has been filled in/covered by rubber-build up. | X | | |
| | Grease smear method (MTD) | Measure a volume – Mean Texture Depth (MTD) primarily by using the grease smear method, is the measurement method used for research purposes related to aeroplane performance. | X | | |
| | Sand (glass) patch method (MTD) | Measure a volume – Mean Texture Depth. The sand (glass) patch method are not identical to the grease smear method. There is at present no internationally accepted relationship between the two methods. | X | | |
| | Laser – stationary (MPD)<br>Laser – moving (MPD) | Measure a profile – Mean Profile Depth (MPD). There is no established relationship between MTD and MPD. The relationship must be established for the laser devices used and the preferred volumetric measurement method used. | X | | |

| | | | | | |
|---|---|---|---|---|---|
| | Friction measurement – controlled applied water depth | A friction measurement is a system output which includes all the surface friction characteristics and characteristics of the measuring device itself. All other variables than those related to the surface friction characteristics must be controlled in order to relate the measured values to the surface friction characteristics.<br><br>The system output is a dimensionless number which is related to the surface friction characteristics and as such is also a measure of macrotexture. (The system generated number needs to be paired with other information (assessment methods) to identify which surface friction characteristics that significantly influence the system output.)<br><br>It is recognised that there is currently no consensus within the aviation industry how to control the uncertainty related to repeatability, reproducibility and time stability. It is paramount to keep this uncertainty as low as possibly, consequently ICAO has tightened the standards associated with use of friction measurement devices, including training of personnel who operates the friction measuring devices. | X | | X |
| | Friction measurement –<br>Natural wet conditions | Friction measurements performed under natural wet conditions during a rain storm might reveal if portions of a runway are susceptible to ponding and/or to fall below State set criteria. | X | X | X |
| | Modelling of water flow and prediction of water depth | Emerging technologies based on the use of a model of the runway surface describing its geometrical surface (mapped) and paired with sensor information of water depth allow real-time information and thus a complete runway surface monitoring, and anticipation of water depths. | | X | |

— — — — — — — —

**ATTACHMENT D** to State letter AN 4/1.1.55-15/30

## PROPOSED AMENDMENT TO ANNEX 3

### NOTES ON THE PRESENTATION OF THE AMENDMENT

The text of the amendment is arranged to show deleted text with a line through it and new text highlighted with grey shading, as shown below:

| | |
|---|---|
| ~~Text to be deleted is shown with a line through it.~~ | Text to be deleted |
| New text to be inserted is highlighted with grey shading. | New text to be inserted |
| ~~Text to be deleted is shown with a line through it~~ followed by the replacement text which is highlighted with grey shading. | New text to replace existing text |

**TEXT OF PROPOSED AMENDMENT TO**

**INTERNATIONAL STANDARDS**
**AND RECOMMENDED PRACTICES**

**METEOROLOGICAL SERVICE FOR INTERNATIONAL AIR NAVIGATION**

**ANNEX 3**
**TO THE CONVENTION ON INTERNATIONAL CIVIL AVIATION**

. . .

**INITIAL PROPOSAL 1**

## APPENDIX 3. TECHNICAL SPECIFICATIONS RELATED TO METEOROLOGICAL OBSERVATIONS AND REPORTS

. . .

## 4. OBSERVING AND REPORTING OF METEOROLOGICAL ELEMENTS

. . .

### 4.8 Supplementary information

4.8.1 Reporting

. . .

4.8.1.5 **Recommendation**.— *In METAR and SPECI, ~~the following information should be included in the supplementary information, in accordance with regional air navigation agreement:~~*

*~~a)~~ information on sea-surface temperature, and the state of the sea or the significant wave height, from aeronautical meteorological stations established on offshore structures in support of helicopter operations~~; and~~ should be included in the supplementary information, in accordance with regional air navigation agreement.*

*~~b) information on the state of the runway provided by the appropriate airport authority.~~*

*Note ~~1~~.— The state of the sea is specified in ~~WMO Publication No. 306,~~* the Manual on Codes (WMO No. 306)*, Volume I.1, Part A — Alphanumeric Codes, Code Table 3700.*

*~~Note 2.— The state of the runway is specified in WMO Publication No. 306, Manual on Codes, Volume I.1, Part A — Alphanumeric Codes, Code Tables 0366, 0519, 0919 and 1079.~~*

. . .

## Table A3-2. Template for METAR and SPECI

Key: M = inclusion mandatory, part of every message;
C = inclusion conditional, dependent on meteorological conditions or method of observation;
O = inclusion optional.

*Note 1.— The ranges and resolutions for the numerical elements included in METAR and SPECI are shown in Table A3-5 of this appendix.*

*Note 2.— The explanations for the abbreviations can be found in the* Procedures for Air Navigation Services — ICAO Abbreviations and Codes *(PANS-ABC, Doc 8400).*

| *Element as specified in Chapter 4* | *Detailed content* | *Template(s)* | *Examples* |
|---|---|---|---|
| . . . | | | |
| Supplementary information (C) | Recent weather (C)[2, 9] | REFZDZ *or* REFZRA *or* REDZ *or* RE[SH]RA *or* RERASN *or* RE[SH]SN *or* RESG *or* RESHGR *or* RESHGS *or* REBLSN *or* RESS *or* REDS *or* RETSRA *or* RETSSN *or* RETSGR *or* RETSGS *or* RETS *or* REFC *or* REVA *or* REPL *or* REUP[12] *or* REFZUP[12] *or* RETSUP[12] *or* RESHUP[12] | REFZRA<br>RETSRA |
| | Wind shear (C)[2] | WS Rnn[L] *or* WS Rnn[C] *or* WS Rnn[R] *or* WS ALL RWY | WS R03<br>WS ALL RWY<br>WS R18C |
| | Sea-surface temperature and state of the sea or significant wave height (C)[15] | W[M]nn/Sn *or* W[M]nn/Hn[n][n] | W15/S2<br>W12/H75 |
| | ~~State of the runway (C)[16]~~ ~~Runway designator (M)~~ | ~~R nn[L]/ *or* Rnn[C]/ *or* Rnn[R]/~~ ~~R/SNOCLO~~ | ~~R99/421594~~<br>~~R/SNOCLO~~<br>~~R14L/CLRD//~~ |
| | ~~Runway deposits (M)~~ | ~~n *or* /~~ ~~CLRD//~~ | |
| | ~~Extent of runway contamination (M)~~ | ~~n *or* /~~ | |
| | ~~Depth of deposit (M)~~ | ~~nn *or* //~~ | |
| | ~~Friction coefficient or braking action (M)~~ | ~~nn *or* //~~ | |
| Trend forecast (O)~~[17]~~[16]<br>. . . | Change indicator (M)~~[18]~~[17] | NOSIG<br>BECMG *or* TEMPO | NOSIG BECMG FEW020 |

Notes.—

. . .

15. To be included in accordance with 4.8.1.5~~ a)~~.

~~16. To be included in accordance with 4.8.1.5 b).~~

~~17~~ 16. To be included in accordance with Chapter 6, 6.3.2.

~~18~~ 17. Number of change indicators to be kept to a minimum in accordance with Appendix 5, 2.2.1, normally not exceeding three groups.

. . .

**Table A3-5. Ranges and resolutions for the numerical elements included in METAR and SPECI**

| *Element as specified in Chapter 4* | | | *Range* | *Resolution* |
|---|---|---|---|---|
| … | | | | |
| ~~State of the runway~~ | ~~Runway designator:~~ | ~~(no units)~~ | ~~01 – 36; 88; 99~~ | ~~1~~ |
| | ~~Runway deposits:~~ | ~~(no units)~~ | ~~0 – 9~~ | ~~1~~ |
| | ~~Extent of runway contamination:~~ | ~~(no units)~~ | ~~1; 2; 5; 9~~ | ~~—~~ |
| | ~~Depth of deposit:~~ | ~~(no units)~~ | ~~00 – 90; 92 – 99~~ | ~~1~~ |
| | ~~Friction coefficient/braking action:~~ | ~~(no units)~~ | ~~00 – 95; 99~~ | ~~1~~ |
| … | | | | |

| *Origin* | *Rationale* |
|---|---|
| FTF, AP3 | The provisions in Annex 3 relating to the reporting of the state of the runway are no longer required as they are superseded by the introduction of the global reporting format. |

— — — — — — — —

**ATTACHMENT E** to State letter AN 4/1.1.55-15/30

## PROPOSED AMENDMENT TO ANNEX 6, PART I

### NOTES ON THE PRESENTATION OF THE AMENDMENT

The text of the amendment is arranged to show deleted text with a line through it and new text highlighted with grey shading, as shown below:

| | |
|---|---|
| ~~Text to be deleted is shown with a line through it.~~ | Text to be deleted |
| New text to be inserted is highlighted with grey shading. | New text to be inserted |
| ~~Text to be deleted is shown with a line through it~~ followed by the replacement text which is highlighted with grey shading. | New text to replace existing text |

**TEXT OF PROPOSED AMENDMENT TO**

**INTERNATIONAL STANDARDS**
**AND RECOMMENDED PRACTICES**

**OPERATION OF AIRCRAFT**

**ANNEX 6**
**TO THE CONVENTION ON INTERNATIONAL CIVIL AVIATION**

**PART I**
**(INTERNATIONAL COMMERCIAL AIR TRANSPORT — AEROPLANES)**

. . .

**INITIAL PROPOSAL 1**

## CHAPTER 1. DEFINITIONS

. . .

***Configuration deviation list (CDL).*** A list established by the organization responsible for the type design with the approval of the State of Design which identifies any external parts of an aircraft type which may be missing at the commencement of a flight, and which contains, where necessary, any information on associated operating limitations and performance correction.

***Contaminated runway***. A runway is contaminated when a significant portion of the runway surface area (whether in isolated areas or not) within the length and width being used is covered by one or more of the substances listed in the runway surface condition descriptors.

*Note.— Further information on runway surface condition descriptors can be found in the Annex 14, Volume I, Definitions.*

. . .

***Decision altitude (DA)*** or ***decision height (DH).*** A specified altitude or height in a 3D instrument approach operation at which a missed approach must be initiated if the required visual reference to continue the approach has not been established.

. . .

***Dry runway***. A runway is considered dry if its surface is not wet or contaminated and free of visible moisture within the area intended to be used.

. . .

***Visual meteorological conditions (VMC).*** Meteorological conditions expressed in terms of visibility, distance from cloud, and ceiling*, equal to or better than specified minima.

*Note.— The specified minima are contained in Chapter 4 of Annex 2.*

***Wet runway***. The runway surface is covered by any visible dampness or water less than 3 mm deep within the intended area of use.

| *Origin* | *Rationale* |
|---|---|
| FTF, OPSP | To ensure common terminology, identical to the definitions agreed for Annex 14, Volume I. |

. . .

**INITIAL PROPOSAL 2**

## CHAPTER 4. FLIGHT OPERATIONS

. . .

### 4.4 In-flight procedures

. . .

4.4.2 Meteorological observations

*Note.— The procedures for making meteorological observations on board aircraft in flight and for recording and reporting them are contained in Annex 3, the PANS-ATM (Doc 4444) and the appropriate* Regional Supplementary Procedures *(Doc 7030).*

4.4.2.1 The pilot-in-command shall report the runway braking action advisory air-report (AIREP) when the runway braking action encountered is not as good as reported.

*Note.— The procedures for making special air-reports regarding runway braking action are contained in the* Procedures for Air Navigation Services — Air Traffic Management *(PANS-ATM, Doc 4444), Chapter 4 and Appendix 1, Instructions for air-reporting by voice communication.*

| *Origin* | *Rationale* |
|---|---|
| FTF, OPSP | Chapter 4 of Annex 6 frequently refers to meteorological conditions when addressing minima. This creates an ambiguity in so far as meteorological conditions may be interpreted as being exclusively the airborne phenomena that affect aircraft operations, or as including the deposits on the ground. It has been argued that while weather may be forecast reasonably well, the resulting deposits (due to accumulation, alteration, treatment, removal) cannot be forecast reliably. Even so, weather and contamination are similar in that they do not affect all aircraft/operators in the same way, with the complication that the limitation of the operation may not be the direct result of an observable parameter going out of limits (RVR, ceiling, …), but of an indirect effect on the runway length necessary for a safe operation, via the aeroplane performance assessment.<br><br>It is proposed to associate meteorological minima and performance limitations due to runway surface condition, while specifically mentioning those limitations where applicable.<br><br>In line with that principle, a reference to pilot advisory reports on runway condition is associated with 4.4.2. |

. . .

4.4.11 Aeroplane operating procedures for landing performance

An approach to land shall not be continued below 300 m (1 000 ft) above aerodrome elevation unless the pilot-in-command is satisfied that, with the runway surface condition information available, the aeroplane performance information indicates that a safe landing can be made.

*Note 1.— The procedures used by aerodromes to assess and report runway surface conditions are contained in the PANS-Aerodromes (Doc 9981) and those for using runway surface condition information on board aircraft in the* Aeroplane Performance Manual *(Doc xxxx)*

*Note 2.— Guidance on development of aeroplane performance information is contained in the* Aeroplane Performance Manual *(Doc xxxx).*

| *Origin* | *Rationale* |
|---|---|
| FTF, OPSP | One of the major contributors to enhanced safety through the global reporting format is the systematic consideration of performance aspects during landing preparation. EU-OPS 1.400 / IR OPS CAT.OP.MPA.300 currently have such a provision. The text proposed as a new paragraph to Annex 6, Section 4.4 – In-Flight Procedures is largely based on those provisions while leaving more flexibility than the original text regarding the way the performance information is provided. It was considered appropriate since it fulfilled the concept of the TALPA ARC, that while an awareness of landing performance limitations should be part of each and every landing preparation, this did not necessarily require a performance computation at that time. |

. . .

**INITIAL PROPOSAL 3**

## CHAPTER 5. AEROPLANE PERFORMANCE OPERATING LIMITATIONS

. . .

### 5.2 Applicable to aeroplanes certificated in accordance with Parts IIIA and IIIB of Annex 8

. . .

5.2.6 In applying the Standards of this chapter, account shall be taken of all factors that significantly affect the performance of the aeroplane, including but not limited to: the mass of the aeroplane, the operating procedures, the pressure-altitude appropriate to the elevation of the aerodrome, the runway slope, the ambient temperature, the wind, ~~the runway slope,~~ and surface conditions of the runway at the expected time of use i.e., presence of snow, slush, water, and/or ice for landplanes, water surface condition for seaplanes. Such factors shall be taken into account directly as operational parameters or indirectly by means of allowances or margins, which may be provided in the scheduling of performance data or in the comprehensive and detailed code of performance in accordance with which the aeroplane is being operated.

*Note.— Guidelines for using runway surface condition information on board aircraft in accordance with 4.4.11 are contained in the* Aeroplane Performance Manual *(Doc xxxx).*

| *Origin* | *Rationale* |
|---|---|
| | The provisions of 5.2.6 actually cover the intent of TALPA ARC proposals without spelling out the compliance with these proposals. The proposed addition of the Note is to indicate that the appropriate level of detail is provided in the PANS-Aerodromes and in the *Aeroplane Performance Manual* (Doc xxxx) (currently under development). |

. . .

5.2.11 *Landing*. The aeroplane shall, at the aerodrome of intended landing and at any alternate aerodrome, after clearing all obstacles in the approach path by a safe margin, be able to land, with assurance that it can come to a stop or, for a seaplane, to a satisfactorily low speed, within the landing distance available. Allowance shall be made for expected variations in the approach and landing techniques, if such allowance has not been made in the scheduling of performance data.

*Note.— Guidance on appropriate margins for the at time of landing distance assessment is contained in the* Aeroplane Performance Manual *(Doc xxxx).*

| *Origin* | *Rationale* |
|---|---|
| FTF, OPSP | Paragraph 5.2.11 mandates appropriate margins. The formulation of the provision reflects the option of the manufacturer to provide certified distances with or without margins included. This may be considered sufficient to mandate margins on the new in-flight landing distances that would be detailed in the aeroplane performance manual, as referenced by the Note. |

. . .

**INITIAL PROPOSAL 4**

## ATTACHMENT C. AEROPLANE PERFORMANCE OPERATING LIMITATIONS

*Editorial Note.—* It is proposed to transfer all the contents of this attachment to the aeroplane performance manual. Notes referencing this attachment will be amended accordingly.

— — — — — — — —

**ATTACHMENT F** to State letter AN 4/1.1.55-15/30

## PROPOSED AMENDMENT TO ANNEX 6, PART II

### NOTES ON THE PRESENTATION OF THE AMENDMENT

The text of the amendment is arranged to show deleted text with a line through it and new text highlighted with grey shading, as shown below:

| | |
|---|---|
| ~~Text to be deleted is shown with a line through it.~~ | Text to be deleted |
| New text to be inserted is highlighted with grey shading. | New text to be inserted |
| ~~Text to be deleted is shown with a line through it~~ followed by the replacement text which is highlighted with grey shading. | New text to replace existing text |

**TEXT OF PROPOSED AMENDMENT TO**

**INTERNATIONAL STANDARDS**
**AND RECOMMENDED PRACTICES**

**OPERATION OF AIRCRAFT**

**ANNEX 6**
**TO THE CONVENTION ON INTERNATIONAL CIVIL AVIATION**

**PART II**
**(INTERNATIONAL GENERAL AVIATION — AEROPLANES)**

. . .

**INITIAL PROPOSAL 1**

**SECTION 2**
**GENERAL AVIATION OPERATIONS**

. . .

**CHAPTER 2.2 FLIGHT OPERATIONS**

. . .

2.2.4.2 ~~Weather reporting~~ Meteorological and operational observations by pilots

2.2.4.2.1 **Recommendation**.— *When ~~weather~~ meteorological conditions likely to affect the safety of other aircraft are encountered, they should be reported as soon as possible.*

*Note.— The procedures for making meteorological observations on board aircraft in flight and for recording and reporting them are contained in Annex 3, the PANS-ATM (Doc 4444) and the appropriate* Regional Supplementary Procedures *(Doc 7030).*

2.2.4.2.2 **Recommendation**.—*The pilot-in-command should report runway braking action when the runway braking action encountered is not as good as reported.*

*Note.— The procedures for making special air-reports regarding runway braking action are contained in the* Procedures for Air Navigation Services — Air Traffic Management *(PANS-ATM, Doc 4444), Chapter 4, and Appendix 1, Instructions for air-reporting by voice communication.*

| *Origin* | *Rationale* |
|---|---|
| FTF, OPSP | The above amendment is required to implement the new runway condition report and align Annex 6, Part II with Part I. However, 2.2.4.2.2 is proposed as a recommendation to take into account the environment in which general aviation operations are conducted which could prevent the pilot-in-command from filing an AIREP. |

2.2.4.3 Hazardous flight conditions

**Recommendation.—** *Hazardous flight conditions encountered, other than those associated with meteorological conditions, should be reported to the appropriate aeronautical station as soon as possible. The reports so rendered should give such details as may be pertinent to the safety of other aircraft.*

2.2.4.4 Aeroplane operating procedures for landing performance

An approach to land shall not be continued below 300 m (1 000 ft) above aerodrome elevation unless the pilot-in-command is satisfied that, with the runway surface condition information available, the aeroplane performance information indicates that a safe landing can be made.

*Note 1.— The procedures for using runway surface condition information on board aircraft are contained in the PANS-Aerodromes (Doc 9981) and in the performance section of the aeroplane flight manual, and for aeroplanes certificated in accordance with Annex 8, Part IIIB, the* Aeroplane Performance Manual *(Doc xxxx).*

*Note 2.— Guidance on development of aeroplane performance information for aeroplanes certificated in accordance with Annex 8, Part IIIB is contained in the* Aeroplane Performance Manual *(Doc xxxx).*

*Editorial Note.— Renumber* subsequent paragraphs.

| *Origin* | *Rationale* |
|---|---|
| FTF, OPSP | The above amendment is required to implement the new runway condition report and align Annex 6, Part II with Part I. As the *Aeroplane Performance Manual* (Doc xxxx) is intended to provide guidance as to the level of performance intended by the provisions of Annex 6, Part I, Chapter 5 and Annex 8, Part IIIB as applicable to turbine-powered subsonic transport type aeroplanes over 5 700 kg maximum certificated take-off mass having two or more engines it is considered appropriate to differentiate the source of information cited in Notes 1 and 2. |

. . .

**INITIAL PROPOSAL 2**

## SECTION 3
## LARGE AND TURBOJET AEROPLANES

. . .

## CHAPTER 3.5 AEROPLANE PERFORMANCE OPERATING LIMITATIONS

. . .

### 3.5.2 Applicable to aeroplanes certificated in accordance with Parts IIIA and IIIB of Annex 8

. . .

3.5.2.5 In applying the Standards of this chapter, account shall be taken of all factors that significantly affect the performance of the aeroplane (such as: mass, operating procedures, the pressure altitude appropriate to the elevation of the aerodrome, the slope of the runway, the ambient temperature, wind, ~~runway gradient~~ and surface condition of runway at the expected time of use, i.e. presence of slush, water and/or ice, for landplanes, water surface condition for seaplanes). Such factors shall be taken into account directly as operational parameters or indirectly by means of allowances or margins, which may be provided in the scheduling of performance data or in the comprehensive and detailed code of performance in accordance with which the aeroplane is being operated.

*Note.— Guidelines for using runway surface condition information on board aircraft in accordance with 2.2.4.4 are contained in the PANS-Aerodromes (Doc 9981) and in the* Aeroplane Performance Manual *(Doc xxxx).*

. . .

3.5.2.9 *Landing.* The aeroplane shall, at the aerodrome of intended landing and at any alternate aerodrome, after clearing all obstacles in the approach path by a safe margin, be able to land, with assurance that it can come to a stop or, for a seaplane, to a satisfactorily low speed, within the landing distance available. Allowance shall be made for expected variations in the approach and landing techniques, if such allowance has not been made in the scheduling of performance data.

*Note.— Guidance on appropriate margins for the at time of landing assessment are contained in the* Aeroplane Performance Manual *(Doc xxxx).*

| *Origin* | *Rationale* |
|---|---|
| FTF, OPSP | The following amendment is required to implement the new global reporting format and align Annex 6, Part II with Part I. |

**Additional consideration**

If Attachment C to Annex 6, Part I is deleted when the *Aeroplane Performance Manual* (Doc xxxx) is developed, the following amendment also should be made to Annex 6, Part II.

3.5.2.7 *Take-off.* The aeroplane shall be able, in the event of a critical engine failing at any point in the take-off, either to discontinue the take-off and stop within either the accelerate-stop distance available or the runway available, or to continue the take-off and clear all obstacles along the flight path by an adequate margin until the aeroplane is in a position to comply with 3.5.2.8.

*Note.— "An adequate margin" referred to in this provision is illustrated by the appropriate examples included in ~~Attachment C to Annex 6, Part I~~ the* Aeroplane Performance Manual *(Doc xxxx).*

— — — — — — — —

**ATTACHMENT G** to State letter AN 4/1.1.55-15/30

**PROPOSED AMENDMENT TO ANNEX 8**

## NOTES ON THE PRESENTATION OF THE AMENDMENT

The text of the amendment is arranged to show deleted text with a line through it and new text highlighted with grey shading, as shown below:

| | |
|---|---|
| ~~Text to be deleted is shown with a line through it.~~ | Text to be deleted |
| New text to be inserted is highlighted with grey shading. | New text to be inserted |
| ~~Text to be deleted is shown with a line through it~~ followed by the replacement text which is highlighted with grey shading. | New text to replace existing text |

**TEXT OF PROPOSED AMENDMENT TO**

**INTERNATIONAL STANDARDS
AND RECOMMENDED PRACTICES**

**AIRWORTHINESS OF AIRCRAFT**

**ANNEX 8
TO THE CONVENTION ON INTERNATIONAL CIVIL AVIATION**

. . .

## PART IIIB. AEROPLANES OVER 5 700 KG FOR WHICH APPLICATION FOR CERTIFICATION WAS SUBMITTED ON OR AFTER 2 MARCH 2004

*Note by the Secretariat.—* The proposed amendment to Standards generally can be considered as clarification of the text and thus entirely editorial, not changing the certification requirements. However, two proposals are considered to amend the certification requirements. As such, they cannot be applicable to the aeroplanes for which an application for the issue of a Type Certificate is submitted to the appropriate national authorities before [Date of adoption + 3 years]. Thus, the existing Standards (2.2.4.1 and 2.2.7.2) remain as is, with minor editorial improvements, and are applicable to the aeroplanes for which an application for the issue of a Type Certificate is submitted to the appropriate national authorities before [Date of adoption + 3 years]. This also leads to adding two Standards (2.2.4.2 and 2.2.7.3) that would only be applicable to the aeroplanes for which an application for the issue of a Type Certificate is submitted to the appropriate national authorities on or after [Date of adoption + 3 years].

. . .

**INITIAL PROPOSAL 1**

## CHAPTER 2. FLIGHT

. . .

### 2.2 Performance

2.2.1 Sufficient data on the performance of the aeroplane shall be determined and ~~scheduled~~ furnished in the flight manual to provide operators with the necessary information for the purpose of determining the maximum total mass of the aeroplane ~~on the basis of the values, peculiar to the proposed flight, of the relevant operational parameters, in order~~ at the time of take-off that would allow the flight ~~may~~ to be made with reasonable assurance that a safe minimum performance for that flight will be achieved considering the values of the operational parameter peculiar to the proposed flight.

| *Origin* | *Rationale* |
|---|---|
| FTF, AIRP | This re-write clarifies the intent of the requirement and makes it consistent with current practices (while retaining most of the current text). The intent of the performance data in the flight manual is to allow the operator to determine the maximum performance limited mass at which the airplane may be dispatched. |

| | |
|---|---|
| | In addition, the word "furnished" clarifies the meaning of "scheduled", consistent with usage in the United States (US) Federal Aviation Regulations (FAR) Part 25 and European Certification Specifications for large aeroplanes (CS25). |

2.2.2 Achieving the performance ~~scheduled~~ furnished in the flight manual for the aeroplane shall take into consideration human performance and in particular shall not require exceptional skill or alertness on the part of the flight crew.

*Note.— Guidance material on human performance can be found in the* Human Factors Training Manual *(Doc 9683).*

2.2.3 The ~~scheduled~~ performance data in the flight manual of the aeroplane shall be consistent with compliance with 1.2.1 and with the operation in logical combinations of those of the aeroplane's systems and equipment, the operation of which may affect performance.

| *Origin* | *Rationale* |
|---|---|
| FTF, AIRP | The words "furnished in the flight manual" and "data in the flight manual" clarify the meaning of "scheduled", consistent with usage in FAR Part 25 and CS25. |

2.2.4 Minimum performance

2.2.4.1 ~~At~~ For aeroplanes for which application for certification was submitted before [Date of adoption + 3 years], the maximum masses scheduled ~~(see 2.2.7)~~ for take-off and for landing permitted by the performance data in the flight manual (see 2.2.7.2) as functions of the aerodrome elevation or pressure-altitude either in the standard atmosphere or in specified still air atmospheric conditions, and, for seaplanes, in specified conditions of smooth water, the aeroplane shall be capable of accomplishing the minimum performances specified in 2.2.5 and 2.2.6, respectively, not considering obstacles, or runway or water run length.

*Note.— This Standard permits the maximum take-off mass and maximum landing mass to be scheduled in the flight manual against, for example:*

*— aerodrome elevation, or*

*— pressure-altitude at aerodrome level, or*

*— pressure-altitude and atmospheric temperature at aerodrome level,*

*so as to be readily usable when applying the national code on aeroplane performance operating limitations.*

2.2.4.2 For aeroplanes for which application for certification was submitted on or after [Date of adoption + 3 years], at the maximum mass for take-off and for landing permitted by the performance data in the flight manual (see 2.2.7.3) as functions of the pressure-altitude either in the standard atmosphere or in specified still air atmospheric conditions, and, for seaplanes, in specified conditions of smooth water, the aeroplane shall be capable of accomplishing the minimum performances specified in 2.2.5 and 2.2.6, respectively, not considering obstacles, or runway or water run length.

| *Origin* | *Rationale* |
|---|---|
| FTF, AIRP | 2.2.4.1: The words “permitted by the performance data in the flight manual” clarify the meaning of “scheduled”, an editorial change for aeroplanes for which application for certification was submitted before [Date of adoption + 3 years].<br><br>2.2.4.2: Since Annex 6 requires the pressure altitude (appropriate to the elevation of the aerodrome) to be used in showing compliance with the operating standards, it is proposed to remove the note and the provisions that allow the flight manual to present data in terms other than pressure altitude, for aeroplanes for which application for certification was submitted on or after [Date of adoption + 3 years]. |

2.2.5 Take-off

a) The aeroplane shall be capable of taking off assuming the critical engine to fail (see 2.2.7), the remaining engine(s) being operated within their take-off power or thrust limitations.

b) After the end of the period during which the take-off power or thrust may be used, the aeroplane shall be capable of continuing to climb, with the critical engine inoperative and the remaining engine(s) operated within their maximum continuous power or thrust limitations, up to a height that it can maintain and at which it can continue safe flight and landing.

c) The minimum performance at all stages of take-off and climb shall be sufficient to ensure that under conditions of operation departing slightly from the idealized conditions for which data are ~~scheduled~~ furnished (see 2.2.7), the departure from the ~~scheduled~~ furnished values is not disproportionate.

| *Origin* | *Rationale* |
|---|---|
| FTF, AIRP | The words “furnished in the flight manual” clarify the meaning of “scheduled”, consistent with usage in FAR Part 25 and CS25. |

2.2.6 Landing

a) Starting from the approach configuration and with the critical engine inoperative, the aeroplane shall be capable, in the event of a missed approach, of continuing the flight to a point from which another approach can be made.

b) Starting from the landing configuration, the aeroplane shall be capable, in the event of a balked landing, of making a climb-out, with all engine(s) operating.

2.2.7 ~~Scheduling of performance~~ Performance data

2.2.7.1 The following stages are considered, as applicable:

*Editorial Note.— Move* current sub-items a) through e) from the existing paragraph to this location as amended below:

a) *Take-off*. The take-off performance data shall include the accelerate-stop distance and the take-off path.

b) *Accelerate-stop distance*. The accelerate-stop distance shall be the distance required to accelerate and stop, or, for a seaplane to accelerate and come to a satisfactorily low speed, assuming the critical engine to fail suddenly at a point not nearer to the start of the take-off than that assumed when determining the take-off path (see 2.2.7.1 c)). ~~For~~ Additionally, for landplanes, the distance shall be based on operations with all the wheel brake assemblies at the fully worn limit of their allowable wear range.

| *Origin* | *Rationale* |
|---|---|
| FTF, AIRP | This was inserted to clarify that the generic provisions of 2.2.7 applied to the determination of the accelerate stop distance, but that additionally the brake-wear condition had to be fulfilled. |

c) *Take-off path*. The take-off path shall comprise the ground or water run, initial climb and climb-out, assuming the critical engine to fail suddenly during the take-off (see 2.2.7.1 b)). The take-off path shall be scheduled up to a height from which the aeroplane can continue safe flight and landing. The climb-out shall be made at a speed not less than the take-off safety speed as determined in accordance with 2.3.2.4.

d) *En route*. The en-route climb performance shall be the climb (or descent) performance with the aeroplane in the en-route configuration with:

1) the critical engine inoperative; and

2) the two critical engines inoperative in the case of aeroplanes having three or more engines.

The operating engine(s) shall not exceed maximum continuous power or thrust.

e) ~~*Landing*~~ *At time of take-off landing performance data*. The landing distance shall be the horizontal distance traversed by the aeroplane from a point on the approach flight path at a selected height above the landing surface to the point on the landing surface at which the aeroplane comes to a complete stop, or, for a seaplane, comes to a satisfactorily low speed. The selected height above the landing surface and the approach speed shall be appropriately related to operating practices. This distance may be supplemented by such distance margin as may be necessary; if so, the selected height above the landing surface, the approach speed and the distance margin shall be appropriately interrelated and shall make provision for both normal operating practices and reasonable variations therefrom. For landplanes, this distance shall be based on operations with all the wheel brake assemblies at the fully worn limit of their allowable wear range.

*Note.— If the at time of take-off landing ~~distance~~ performance data includes the distance margin specified in this Standard, it is not necessary to allow for the expected variations in the approach and landing techniques in applying 5.2.11 of Annex 6, Part I.*

| *Origin* | *Rationale* |
|---|---|
| FTF, AIRP | Paragraph e) of 2.2.7 refers only to the landing performance to be used for dispatch (at time of take-off). This paragraph is unchanged but renamed to allow the distinction from the new set of landing distances defined in paragraph f).<br><br>At dispatch, take-off and landing limitations need to be assessed. It was decided not to make any changes to existing dispatch regulation.<br><br>The Friction Task Force Annex 6 and 8 subgroup was given terms of reference that included the following two tasks:<br><br>a) Annex 8 Task 2: To review certified landing performance computation for dispatch for better alignment with the operational performance and consistent with the margins proposed for Annex 6.<br><br>b) Annex 6 Task 4: Additionally, the group may wish to review the current standards for determination of landing performance at dispatch to achieve better alignment with operational performance and consistent margins for all runway conditions (dry, wet and contaminated).<br><br>Currently, FAR25.125 / CS 25.125 describe the criteria for determining landing distances to be furnished in the AFM. The means of compliance that were historically accepted, involving a parametric method of determining the air distance that allows use of an unrealistic glideslope angle and rate of descent at touchdown, have led to the publication by manufacturers of distances that were operationally not achievable.<br><br>FAR 121.195 and EASA CAT.POL.A.230 and 235 prescribe the method of computing dispatch landing distances for dry (1.67* "demonstrated" dry runway landing distance) and wet (including slippery for FAR 121) runways (1.92* "demonstrated" dry runway landing distance). CAT.POL.A.235, additionally supplies the factor (1.15) to be applied to contaminated runway distances published in compliance with CS25.1591.<br><br>Furthermore, EASA prescribes performance considerations during the approach preparation on CAT.OP.MPA.300, but without specifying what data to use and which margins are to be applied.<br><br>The TALPA ARC was tasked with proposing amendments to existing FAA regulation, which do not contain specific provisions for contaminated runways. No proposals were made to change existing provisions for the time of take-off computations of landing performance. Rather, the presence of any runway contamination beyond a thin layer of water leading to worse braking action than anticipated at time of dispatch, was addressed through an in-flight check to ascertain that a safe landing can be made. This was to be based on a new set of in-flight landing distances specified by the TALPA ARC, considering |

| | |
|---|---|
| | operational assumptions different from the conditions permitted for landing performance certification, resulting typically in longer distances. This difference of computation for dispatch and for actual landing preparation is justified by the fact that many parameters about the landing are not known precisely at time of dispatch. This is true for the weather (no consideration of outside ambient temperature), but even the runway used (since operational regulations allow dispatch to the longest available runway in zero wind, whether this is forecast to be the operational runway or not). Consequently, there is no accountability for runway slope below 2 per cent. Arguably, this lack of knowledge also applies to the runway surface conditions which, unlike weather, are difficult to forecast due to accumulation, alteration and removal. These effects are deemed to be covered by large margins applied to AFM distances for dispatch, albeit for dry and normally wet conditions only. The TALPA ARC added the in-flight check to mandate an operational crosscheck using the latest information and more operational distances. Since the distances were generally more achievable by line crews, but still considered expected conditions, a margin, although smaller, is still considered necessary to cover aspects like undetected minor system failures, long touchdown, high approach speed, unknown tailwind or poor runway upkeep and other variables otherwise unaccounted for. The TALPA ARC recommended 15 per cent.<br><br>For wet runways, these two sets of distances with different margins, however, generate an exposure to the in-flight distances being longer than the dispatch ones under certain circumstances, in particular, when reverse thrust credit is not considered or available for in-flight landing computation. This should not be surprising as when the 1.15 factor times the FAR Dry (1.67* "demonstrated" dry runway landing distance) was determined, the FAA argued for a 1.20 factor. The airlines, however, countered that a smaller factor (1.15) was applicable because they use reverse thrust and, in those days, the thrust reversers typically were much more effective than higher by-pass engines which only reversed the fan flow and not the entire flow from behind the engine. Also at the time this rule was instituted, the anti-skid systems were anywhere from 10 to 30 per cent less efficient on a dry runway than they are today.<br><br>Furthermore, the assumptions for contaminated runways proposed by TALPA are not fully consistent with those set out in EASA CS25.1591 and the associated acceptable means of compliance for performance computation on contaminated runways. This situation can create a difference between aeroplane mass limitations considered at dispatch under EU regulations and the typically lower limitations resulting from the new in-flight criteria.<br><br>The tasks given to the subgroup aimed at evaluating the possibility of reducing this difference between the factored at time of take-off landing distances and the factored at time of landing distances to those justified by the greater uncertainty at dispatch regarding the expected conditions at destination at time of landing.<br><br>It was decided that this task would not be addressed by the FTF Annex 6/8 subgroup. The group came to the conclusion that challenging existing dispatch requirements to harmonize for example the airborne distances and the margins, both between dispatch distances for different runway conditions and with the |

| | |
|---|---|
| | TALPA in-flight landing distances, would have large economic repercussions that cannot be justified by a safety benefit which cannot be assessed, since the contribution of current dispatch margins to the existing safety record cannot be quantified. Redefining the AFM distances in line with the TALPA ARC in-flight landing distances would require setting new reasonable (smaller) dispatch factors. If this was done in a conservative way to maintain future factored dispatch distances at least as long as current ones, there would necessarily be a penalty due to the very different construction of the AFM and the TALPA distances, with payload impacts and some of the current operations becoming economically impossible. It was thus decided to retain existing dispatch requirements in Annex 8, and to require a second set of landing performance data for use at time of approach preparation.<br><br>This choice, in line with TALPA ARC recommendations, generates for operators the issue of potentially more constraining in-flight landing performance than was assessed at dispatch. This situation gives rise to questions regarding management at dispatch. Does the in-flight criterion become a de-facto dispatch criterion? Consensus seems to be that it should not, to avoid unnecessary penalties. Should it be entirely disregarded at time of take-off? Consensus seems to be that it is appropriately managed through existing provisions and guidance on alternate designation.<br><br>Some guidance on how to deal with inconsistencies between at time of take-off and at time of landing distances will be given in the *Aeroplane Performance Manual* (Doc xxxx). |

f) *At time of landing performance data*. The landing distance shall be the horizontal distance traversed by the aeroplane from a point on the approach flight path to the point on the landing surface at which the aeroplane comes to a complete stop, or, for a seaplane, comes to a satisfactorily low speed. The approach speed, use of deceleration devices, and airborne portion of the landing distance shall be in accordance with and reflect directly actual normal operating practices. This distance may be supplemented by such distance margin as may be necessary. For landplanes, this distance shall be based on operations with all the wheel brake assemblies at the fully worn limit of their allowable wear range.

| *Origin* | *Rationale* |
|---|---|
| FTF, AIRP | To stress the fact that the group does not desire to challenge existing standards on dispatch performance, a new paragraph is introduced that addresses the requirements on specific in-flight landing performance data, leaving the existing paragraph unchanged. There may need to be some guidance material somewhere that explains the intent of the slight differences in text between the two requirements. The “at time of take-off” requirement refers to inter-relating a distance margin (which we are relating to the operational safety factor of 1.67) to different variables used in determining the landing distance. In this way, we “accept” landing distances that may be shorter (without the factor, that is) than the “at the time of landing” landing distances. The “at time of landing” distance must be based on appropriate approach speeds, etc. and may be supplemented by a distance margin (e.g. the 15 per cent margin) as may be necessary. It is possible that an applicant for a type certificate could use just the “at time of landing” landing distance for both distances, but the operational |

| | |
|---|---|
| | safety factor applied would be contingent upon the specific use (i.e., 1.67 for meeting the operational dispatch requirement and 1.15 for the before landing performance assessment.<br><br>Note: There will need to be consistency between Annex 6 and Annex 8, both in the terminology as well as the intent of the respective requirements.<br><br>There is no need to refer to contaminated runway data, as this is already part of the generic provisions in 2.2.7.3. |

2.2.7.2 For aeroplanes for which application for certification was submitted before [Date of adoption + 3 years], ~~Performance~~ performance data shall be determined and ~~scheduled~~ furnished in the flight manual so that their application by means of the operating rules to which the aeroplane is to be operated in accordance with 5.2 of Annex 6, Part I, will provide a safe relationship between the performance of the aeroplane and the aerodromes and routes on which it is capable of being operated. Performance data shall be determined and ~~scheduled~~ furnished for the ~~following~~ stages in 2.2.7.1 a) to e) for the ranges of mass, altitude or pressure-altitude, wind velocity, gradient of the take-off and landing surface for landplanes; water surface conditions, density of water and strength of current for seaplanes; and for any other operational variables for which the aeroplane is to be certificated.

2.2.7.3 For aeroplanes for which application for certification was submitted on or after [Date of adoption + 3 years], performance data shall be determined and furnished in the flight manual. Such performance data shall be so that their application by means of the operating rules to which the aeroplane is to be operated in accordance with 5.2 of Annex 6, Part I, will provide a safe relationship between the performance of the aeroplane and the aerodromes and routes on which it is capable of being operated. Performance data shall be determined and furnished for the stages in 2.2.7.1 a) to f) for the ranges of mass, pressure-altitude, ambient temperature, wind velocity, and for any other operational variables for which the aeroplane is to be certificated. Additionally, the take-off performance data and the at time of landing performance data shall include the effect of the gradient and conditions (dry, wet, or contaminated) of the take-off or landing surface as appropriate for landplanes, and water surface conditions, density of water, and strength of current for seaplanes. The at time of take-off landing performance data need only to be determined with standard day temperature and level, dry landing surfaces for landplanes, but shall include the effect of water surface conditions, density of water, and strength of current for seaplanes.

| *Origin* | *Rationale* |
|---|---|
| FTF, AIRP | 2.2.7.2. The word “furnished” clarifies the meaning of “scheduled”. The addition of 2.2.7.1 a) to e) identifies the applicable stages for which performance data shall be furnished.<br><br>2.2.7.3. In addition, this re-write is applicable to aeroplanes for which application for certification was submitted on or after [Date of adoption + 3 years], and makes the Standard consistent with the intended practices – that contaminated runway surfaces and runway gradient must be taken into account for take-off and at time of landing performance assessment, but not for the dispatch (at time of take-off) landing distance. Also, only standard day temperature needs to be considered for the dispatch (at time of take-off) landing distance. This paragraph provides the high-level Standard. It is assumed that the details, for example, the specific runway contaminants that |

| | |
|---|---|
| | should be taken into account and how that should be done, would be covered in another document such as the *Aeroplane Performance Manual* (Doc xxxx). |

— — — — — — — —

**ATTACHMENT H** to State letter AN 4/1.1.55-15/30

## PROPOSED AMENDMENT TO ANNEX 15

### NOTES ON THE PRESENTATION OF THE AMENDMENT

The text of the amendment is arranged to show deleted text with a line through it and new text highlighted with grey shading, as shown below:

| | |
|---|---|
| ~~Text to be deleted is shown with a line through it.~~ | Text to be deleted |
| New text to be inserted is highlighted with grey shading. | New text to be inserted |
| ~~Text to be deleted is shown with a line through it~~ followed by the replacement text which is highlighted with grey shading. | New text to replace existing text |

**TEXT OF PROPOSED AMENDMENT TO**

**INTERNATIONAL STANDARDS
AND RECOMMENDED PRACTICES**

**AERONAUTICAL INFORMATION SERVICES**

**ANNEX 15
TO THE CONVENTION ON INTERNATIONAL CIVIL AVIATION**

. . .

**INITIAL PROPOSAL 1**

## CHAPTER 1. GENERAL

. . .

### 1.1 Definitions

. . .

***SNOWTAM***. A special series NOTAM given in a standard format providing a surface condition report notifying the presence or ~~removal~~ cessation of hazardous conditions due to snow, ice, slush, frost or ~~standing~~ water associated with snow, slush ~~and~~, ice, or frost on the movement area~~, by means of a specific format~~.

| *Origin* | *Rationale* |
|---|---|
| AP-WG/WHL-7, AOSWGs/10 – 13, ANC Job Card AP001, APWG/2 | These changes are consequential to changes in Annex 14 and are required to implement the improved runway condition report as developed by the Friction Task Force (FTF) working group of the Aerodromes Panel (AP). The improvements in runway condition reporting relate to providing information in a manner that is more readily useable for the determination of aircraft performance. The use of the term "SNOWTAM" to identify the specifically formatted runway condition information is being retained at this time to minimize the disruption to automated systems used to fetch the information Additionally, the NOTAM mechanism for delivering information will undergo review and further changes with the Information Management Panel (IMP) and, as a consequence, it is considered imperative not to introduce a change which may be short lived. |

. . .

**INITIAL PROPOSAL 2**

## CHAPTER 5. NOTAM

. . .

### 5.2 General specifications

. . .

5.2.2 Text of NOTAM shall be composed of the significations/uniform abbreviated phraseology assigned to the ICAO NOTAM Code complemented by ICAO abbreviations, indicators, identifiers, designators, call signs, frequencies, figures and plain language.

*Note 1.— Detailed guidance material covering NOTAM, SNOWTAM, ASHTAM and PIB production is contained in Doc 8126.*

*Note 2.— Additional procedures covering the reporting of runway surface conditions is contained in PANS-Aerodromes (Doc 9981).*

. . .

5.2.3 Information concerning snow, slush, ice~~ and standing water on aerodrome/heliport pavements shall, when reported~~, frost, standing water, or water associated with snow, slush, ice or frost on the movement area shall be disseminated by means of ~~a~~ SNOWTAM, and contain the information in the order shown in the SNOWTAM Format in Appendix 2.

*Note.— The origin and order of the information is a result of assessment processes and procedures prescribed in PANS-Aerodromes (Doc 9981).*

| *Origin* | *Rationale* |
|---|---|
| FTF, AP3, AIS-AIMSG/10 | Consequential amendment following proposed changes to implement the TALPA method of reporting surface conditions and contaminants. The SNOWTAM designator is being retained as a means of minimising transition issues and disruption to automated systems used to fetch the information on runway conditions. It is expected that the use of “SNOWTAM” as a label will disappear with the evolution of the NOTAM system as a result of the work of the Information Management Panel. |

. . .

## INITIAL PROPOSAL 3

# CHAPTER 7. AERONAUTICAL INFORMATION CIRCULARS (AIC)

## 7.1 Origination

. . .

7.1.1.2 The snow plan published under AD 1.2.2 of Appendix 1 shall be supplemented by seasonal information, to be issued well in advance of the beginning of each winter — not less than one month before the normal onset of winter conditions — and shall contain information such as that listed below:

a) a list of aerodromes/heliports where snow slush, ice or frost clearance is expected to be performed during the coming winter:

| *Origin* | *Rationale* |
|---|---|
| FTF, AP3,<br>AIS-AIMSG | Consequential amendment following changes to Annex 14 and the PANS-Aerodromes (Doc 9981). |

. . .

## INITIAL PROPOSAL 4

# APPENDIX 2. SNOWTAM FORMAT

*(see Chapter 5, 5.2.3)*

| | | | |
|---|---|---|---|
| ~~(COM heading)~~ | ~~(PRIORITY INDICATOR)~~ | ~~(ADDRESSES)~~ | ~~<≡~~ |
| | ~~(DATE AND TIME OF FILING)~~ | ~~(ORIGINATOR'S INDICATOR)~~ | ~~<≡~~ |

| | | | | | | | | | | | | | | | | | | | | | | | | |
|---|---|---|---|---|---|---|---|---|---|---|---|---|---|---|---|---|---|---|---|---|---|---|---|---|
| ~~(Abbreviated heading)~~ | ~~(SWAA* SERIAL NUMBER)~~ | | | | | | | | ~~(LOCATION INDICATOR)~~ | | | | ~~DATE-TIME OF OBSERVATION~~ | | | | | | | | ~~(OPTIONAL GROUP)~~ | | | |
| | ~~S~~ | ~~W~~ | ~~*~~ | ~~*~~ | | | | | | | | | | | | | | | | | | | | ~~<<≡(~~ |

| | |
|---|---|
| ~~SNOWTAM~~ | ~~(Serial number)~~ ~~<≡~~ |

| | |
|---|---|
| ~~(AERODROME LOCATION INDICATOR)~~ | ~~A)~~ ~~<≡~~ |
| ~~(DATE-TIME OF OBSERVATION *(Time of completion of measurement in UTC)*)~~ | ~~B)~~ ⟹ |
| ~~(RUNWAY DESIGNATOR)~~ | ~~C)~~ ⟹ |
| ~~(CLEARED RUNWAY LENGTH, IF LESS THAN PUBLISHED LENGTH *(m)*)~~ | ~~D)~~ ⟹ |
| ~~(CLEARED RUNWAY WIDTH, IF LESS THAN PUBLISHED WIDTH *(m; if offset left or right of centre line add "L" or "R"*))~~ | ~~E)~~ ⟹ |
| ~~(DEPOSITS OVER TOTAL RUNWAY LENGTH~~<br>~~*(Observed on each third of the runway, starting from threshold having the lower runway designation number)*~~<br>~~NIL — CLEAR AND DRY~~<br>~~1 — DAMP~~<br>~~2 — WET~~<br>~~3 — RIME OR FROST COVERED *(depth normally less than 1 mm)*~~<br>~~4 — DRY SNOW~~<br>~~5 — WET SNOW~~<br>~~6 — SLUSH~~<br>~~7 — ICE~~<br>~~8 — COMPACTED OR ROLLED SNOW~~<br>~~9 — FROZEN RUTS OR RIDGES)~~ | ~~F) …./…./….~~<br>⟹ |

| | |
|---|---|
| ~~(MEAN DEPTH *(mm)* FOR EACH THIRD OF TOTAL RUNWAY LENGTH)~~ | ~~G) …./…./….~~ ⟶ |
| ~~(ESTIMATED SURFACE FRICTION ON EACH THIRD OF RUNWAY)~~<br>~~ESTIMATED SURFACE FRICTION~~<br>~~GOOD — 5~~<br>~~MEDIUM/GOOD — 4~~<br>~~MEDIUM — 3~~<br>~~MEDIUM/POOR — 2~~<br>~~POOR — 1~~<br>~~*(The intermediate values of "MEDIUM/GOOD" and "MEDIUM/POOR" provide for more precise information in the estimate when conditions are found to be between medium and either good or poor.)*~~ | ~~H) …./…./….~~ ⟶ |
| ~~(CRITICAL SNOWBANKS *(If present, insert height (cm)/distance from the edge of runway (m) followed by "L", "R" or "LR" if applicable)*)~~ | ~~J)~~ ⟶ |
| ~~(RUNWAY LIGHTS *(If obscured, insert "YES" followed by "L", "R" or both "LR" if applicable)*)~~ | ~~K)~~ ⟶ |
| ~~(FURTHER CLEARANCE *(If planned, insert length (m)/width (m) to be cleared or if to full dimensions, insert "TOTAL")*)~~ | ~~L)~~ ⟶ |
| ~~(FURTHER CLEARANCE EXPECTED TO BE COMPLETED BY . . . *(UTC)*)~~ | ~~M)~~ ⟶ |
| ~~(TAXIWAY *(If no appropriate taxiway is available, insert "NO")*)~~ | ~~N)~~ ⟶ |
| ~~(TAXIWAY SNOWBANKS *(If higher than 60 cm, insert "YES" followed by the lateral distance apart, m)*)~~ | ~~P)~~ ~~<≡~~ |
| ~~(APRON *(If unusable insert "NO")*)~~ | ~~R)~~ ⟶ |
| ~~(NEXT PLANNED OBSERVATION/MEASUREMENT IS FOR) *(month/day/hour in UTC)*~~ | ~~S)~~ ⟶ |
| ~~(PLAIN-LANGUAGE REMARKS *(Including contaminant coverage and other operationally significant information, e.g. sanding, de-icing, chemicals)*)~~ | ~~T)~~ ~~)<≡~~ |
| ~~NOTES: 1. *Enter ICAO nationality letters as given in ICAO Doc 7910, Part 2.~~<br>~~2. Information on other runways, repeat from B to P.~~<br>~~3. Words in brackets ( ) not to be transmitted.~~ | |

~~SIGNATURE OF ORIGINATOR *(not for transmission)*~~

| | | | | |
|---|---|---|---|---|
| (COM heading) | (PRIORITY INDICATOR) | (ADDRESSES) | | ≪≡ |
| | (DATE AND TIME OF FILING) | (ORIGINATOR'S INDICATOR) | | ≪≡ |
| (Abbreviated heading) | (SWAA* SERIAL NUMBER)<br>S W * * | (LOCATION INDICATOR) | DATE/TIME OF ASSESMENT | (OPTIONAL GROUP)<br>≪≡( |
| SNOWTAM | (Serial number) ⟶ ≪≡ | | | |

| Aeroplane performance section | | |
|---|---|---|
| (AERODROME LOCATION INDICATOR) | M | A) |
| (DATE/TIME OF ASSESSMENT *(Time of completion of assessment in UTC)*) | M | B) |
| (LOWER RUNWAY DESIGNATORS) | M | C) |
| RUNWAY CONDITION CODE ON EACH THIRD OF RUNWAY (From Runway Condition Assessment Matrix (RCAM) 0, 1, 2, 3, 4, 5 or 6 | M | D) / / |
| PER CENT COVERAGE CONTAMINANT FOR EACH RUNWAY THIRD | C | E) / / |
| DEPTH *(mm)* OF LOOSE CONTAMINANT FOR EACH THIRD OF RUNWAY) | C | F) / / |
| (CONDITION DESCRIPTION OVER TOTAL RUNWAY LENGTH<br>*(Observed on each third of the runway, starting from threshold having the lower runway designation number)*<br>DRY<br>WET ICE<br>WATER ON TOP OF COMPACTED SNOW<br>DRY SNOW<br>DRY SNOW ON TOP OF ICE<br>WET SNOW ON TOP OF ICE<br>ICE<br>SLUSH<br>STANDING WATER<br>COMPACTED SNOW<br>WET SNOW<br>DRY SNOW ON TOP OF COMPACTED SNOW<br>WET SNOW ON TOP OF COMPACTED SNOW | M | G) / / |

| | | |
|---|---|---|
| WET<br>FROST | | |
| (WIDTH OF RUNWAY TO WHICH THE RWYCCs APPLY, IF LESS THAN PUBLISHED WIDTH) | O | H) ≪≡ |
| **Situational awareness section** | | |
| (REDUCED RUNWAY LENGTH, IF LESS THAN PUBLISHED LENGTH *(m)*) | O | I) |
| DRIFTING SNOW ON THE RUNWAYT | O | J) |
| LOOSE SAND ON THE RUNWAY | O | K) |
| CHEMICAL TREATMENT ON RUNWAY | O | L) |
| (SNOWBANKS ON THE RUNWAY *(If present, distance from runway centreline (m) followed by "L", "R" or "LR" as applicable)*) | O | M) |
| (SNOWBANKS ON A TAXIWAY*(If present, distance from the edge of runway (m) followed by "L", "R" or "LR" as applicable)*) | | N) |
| SNOWBANKS ADJACENT TO THE RUNWAY | O | O) |
| (TAXIWAY CONDITIONS) | O | P) |
| (APRON CONDITIONS) | O | R) |
| (STATE APPROVED AND PUBLISHED USE OF MEASURED FRICTION COEFFICIENT*)* | O | S) |
| (PLAIN-LANGUAGE REMARKS *(Including contaminant coverage and other operationally significant information, e.g. sanding, de-icing)*) | O | T) ) ≪≡ |
| NOTES: 1. *Enter ICAO nationality letters as given in ICAO Doc 7910, Part 2.<br>2. Information on other runways, repeat from C to P.<br>3. Words in brackets ( ) not to be transmitted. | | |

SIGNATURE OF ORIGINATOR *(not for transmission)*

| *Origin* | *Rationale* |
|---|---|
| FTF, AP3, AIS-AIMSG | Consequential changes required to implement the changes to runway surface condition reporting as detailed in Annex 14 and the PANS-Aerodromes (Doc 9981). |

**INITIAL PROPOSAL 5**

## INSTRUCTIONS FOR THE COMPLETION OF THE SNOWTAM FORMAT

*Note.— Origin of data, assessment process and the procedures linked to the surface conditions reporting system are prescribed in the PANS-Aerodromes (Doc 9981).*

1. *General*

a) When reporting on more than one runway, repeat Items B to ~~P inclusive~~ H (the Aeroplane performance section).

b) ~~Items together with their indicator must be dropped completely, where no information is to be included~~ The letters used to indicate items are only used for reference purpose and should not be included in the messages. The letters, M (mandatory) C (conditional) and O (optional) mark the usage and information shall be included as explained below.

c) Metric units ~~must~~ shall be used and the unit of measurement not reported.

d) The maximum validity of SNOWTAM is ~~24~~ 8 hours. New SNOWTAM ~~must~~ shall be issued whenever ~~there is a significant change in conditions. The following changes relating to runway conditions are considered as significant:~~ a new runway condition report is received.

~~1) a change in the coefficient of friction of about 0.05;~~

~~2) changes in depth of deposit greater than the following: 20 mm for dry snow, 10 mm for wet snow, 3 mm for slush;~~

~~3) a change in the available length or width of a runway of 10 per cent or more;~~

~~4) any change in the type of deposit or extent of coverage which requires reclassification in Items F or T of the SNOWTAM;~~

~~5) when critical snow banks exist on one or both sides of the runway, any change in the height or distance from centre line;~~

~~6) any change in the conspicuity of runway lighting caused by obscuring of the lights;~~

~~7) any other conditions known to be significant according to experience or local circumstances.~~

e) A SNOWTAM cancels the previous SNOWTAM.

~~e~~ f) The abbreviated heading "TTAAiiii CCCC MMYYGGgg (BBB)" is included to facilitate the automatic processing of SNOWTAM messages in computer data banks. The explanation of these symbols is:

TT = data designator for SNOWTAM = SW;
AA = geographical designator for States, e.g. LF = FRANCE, EG = United Kingdom (see *Location Indicators* (Doc 7910), Part 2, Index to Nationality Letters for Location Indicators);
iiii = SNOWTAM serial number in a four-digit group;
CCCC = four-letter location indicator of the aerodrome to which the SNOWTAM refers (see *Location Indicators* (Doc 7910));
MMYYGGgg = date/time of observation/measurement, whereby:
MM = month, e.g. January = 01, December = 12
YY = day of the month
GGgg = time in hours (GG) and minutes (gg) UTC;
(BBB) = optional group for:
Correction to SNOWTAM message previously disseminated with the same serial number = COR.

*Note 1.— Brackets in (BBB) are used to indicate that this group is optional.*

*Note 2.— When reporting on more than one runway and individual dates/times of observation/measurement are indicated by repeated Item B, the latest date/time of observation/measuring is inserted in the abbreviated heading (MMYYGGgg).*

*Example*: Abbreviated heading of SNOWTAM No. 149 from Zurich, measurement/observation of 7 November at 0620 UTC:

SWLS0149 LSZH 11070620

*Note.— The information groups are separated by a space, as illustrated above.*

~~f) The text "SNOWTAM" in the SNOWTAM Format and the SNOWTAM serial number in a four-digit group shall be separated by a space, for example: SNOWTAM 0124.~~

g) For readability purposes for the SNOWTAM message, include a line feed after the SNOWTAM serial number~~, after Item A, after the last item referring to the runway (e.g. Item P) and after Item S~~ and after the aeroplane performance section.

h) When reporting on more than one runway, repeat the information in the Aeroplane performance calculation section from the Date and Time of Assessment for each runway before the information in the Situational awareness section.

i) Mandatory information is:

i) AERODROME LOCATION INDICATOR
ii) DATE AND TIME OF ASSESSMENT
iii) LOWER RUNWAY DESIGNATOR NUMBER
iv) RUNWAY CONDITION CODE FOR EACH RUNWAY THIRD
v) CONDITION DESCRIPTION FOR EACH RUNWAY THIRD (when runway condition code is reported 1- 5)

~~2. *Item A* — Aerodrome location indicator (four-letter location indicator).~~

~~3. *Item B* — Eight-figure date/time group — giving time of observation as month, day, hour and minute in UTC; this item must always be completed.~~

~~4. *Item C* — Lower runway designator number.~~

~~5. *Item D* — Cleared runway length in metres, if less than published length (see Item T on reporting on part of runway not cleared).~~

~~6. *Item E* — Cleared runway width in metres, if less than published width; if offset left or right of centre line, add (without space) "L" or "R", as viewed from the threshold having the lower runway designation number.~~

~~7. *Item F* — Deposit over total runway length as explained in SNOWTAM Format. Suitable combinations of these numbers may be used to indicate varying conditions over runway segments. If more than one deposit is present on the same portion of the runway, they should be reported in sequence from the top (closest to the sky) to the bottom (closest to the runway). Drifts, depths of deposit appreciably greater than the average values or other significant characteristics of the deposits may be reported under Item T in plain language. The values for each third of the runway shall be separated by an oblique stroke (/), without space between the deposit values and the oblique stroke, for example: 47/47/47.~~

~~*Note. — Definitions for the various types of snow are given at the end of this Appendix.*~~

~~8. *Item G* — Mean depth in millimetres deposit for each third of total runway length, or "XX" if not measurable or operationally not significant; the assessment to be made to an accuracy of 20 mm for dry snow, 10 mm for wet snow and 3 mm for slush. The values for each third of the runway shall be separated by an oblique stroke (/), without space between the values and the oblique stroke, for example: 20/20/20.~~

~~9. *Item H* — Estimated surface friction on each third of the runway (single digit) in the order from the threshold having the lower runway designation number.~~

~~Friction measurement devices can be used as part of the overall runway surface assessment. Some States may have developed procedures for runway surface assessment which may include the use of information obtained from friction measuring devices and the reporting of quantitative values. In such cases, these procedures should be published in the AIP and the reporting made in Item (T) of the SNOWTAM format.~~

~~The values for each third of the runway are separated by an oblique stroke (/), without space between the values and the oblique stroke , for example: 5/5/5.~~

10. ~~*Item J* — Critical snow banks. If present insert height in centimetres and distance from edge of runway in metres, followed (without space) by left ("L") or right ("R") side or both sides ("LR"), as viewed from the threshold having the lower runway designation number.~~

11. ~~*Item K* — If runway lights are obscured, insert "YES" followed (without space) by "L", "R" or both "LR", as viewed from the threshold having the lower runway designation number.~~

12. ~~*Item L* — When further clearance will be undertaken, enter length and width of runway or "TOTAL" if runway will be cleared to full dimensions.~~

13. ~~*Item M* — Enter the anticipated time of completion in UTC.~~

14. ~~*Item N* — The code (and combination of codes) for Item F may be used to describe taxiway conditions; enter "NO" if no taxiways serving the associated runway are available.~~

15. ~~*Item P* — If snow banks are higher than 60 cm, enter "YES" followed by the lateral distance parting the snow banks (the distance between) in metres.~~

16. ~~*Item R* — The code (and combination of codes) for Item F may be used to describe apron conditions; enter "NO" if the apron is unusable.~~

17. ~~*Item S* — Enter the anticipated time of next observation/measurement in UTC.~~

18. ~~*Item T* — Describe in plain language any operationally significant information but always report on length of uncleared runway (Item D) and extent of runway contamination (Item F) for each third of the runway (if appropriate) in accordance with the following scale:~~

~~RWY CONTAMINATION 10 PER CENT — if 10% or less of runway contaminated~~
~~RWY CONTAMINATION 25 PER CENT — if 11–25% of runway contaminated~~
~~RWY CONTAMINATION 50 PER CENT — if 26–50% of runway contaminated~~
~~RWY CONTAMINATION 100 PER CENT — if 51–100% of runway contaminated.~~

2. *Aeroplane performance calculation section*

Item A — Aerodrome location indicator (*Location Indicators*, Doc 7910).

Item B — Date and time of assessment eight-figure date/time group giving time of observation as month, day, hour and minute in UTC.

Item C — Lower runway designator number ( nn[L] *or* nn[C] *or* nn[R])

1) Only one runway designator shall be inserted for each runway and always the lowest number.

Item D — Runway condition code for each runway third

1) Only one digit (0, 1, 2, 3, 4, 5 or 6) shall be inserted for each runway third, separated by an oblique stroke (n/n/n)

2) When RUNWAY CONDITION CODE FOR EACH RUNWAY THIRD contains any code other than 6 (DRY) then the PER CENT COVERAGE FOR EACH RUNWAY THIRD becomes mandatory for the affected runway thirds.

3) When the CONDITION DESCRIPTION FOR EACH RUNWAY THIRD contains any of the following information:

WET ICE
WATER ON TOP OF COMPACTED SNOW
DRY SNOW
DRY SNOW ON TOP OF ICE
WET SNOW ON TOP OF ICE
ICE
SLUSH
STANDING WATER
COMPACTED SNOW
WET SNOW
DRY SNOW ON TOP OF COMPACTED SNOW
WET SNOW ON TOP OF COMPACTED SNOW
FROST

then the following information becomes mandatory and shall be provided for the respective runway thirds.

Item E — Per cent coverage for each runway third

Insert 25, 50, 75 or 100 for each runway third separated by an oblique stroke ([n]nn/[n]nn/[n]nn).

Item F — Depth of loose contaminant for each runway third in millimetre for each runway third separated by an oblique stroke (nn/nn/nn).

1) This information shall only be reported for the following contamination types:

Standing water, values to be reported03, then assessed value. Significant changes 3 mm up to and including 15 mm.
Slush, values to be reported 02, then assessed value. Significant changes 3 mm up to and including 15 mm.
Wet snow, values to be reported 02, then assessed value. Significant changes 5 mm.
Dry snow, values to be reported 02, then assessed value. Significant changes 20 mm.

2) For contaminants other than the ones above, the depth is not reported.

3) For the information elements “PER CENT COVERAGE FOR EACH RUNWAY THIRD and DEPTH OF LOOSE CONTAMINANT FOR EACH RUNWAY THIRD, sometimes no information exists to be reported (see above for which contaminant types and conditions these elements shall be reported). Even when there

is nothing to report, the oblique strokes shall be included at their relevant position in the message, to indicate to the user that no information exists ( // ).

4) For the information element reporting on “PER CENT COVERAGE FOR EACH RUNWAY THIRD” and “DEPTH OF LOOSE CONTAMINANT FOR EACH RUNWAY THIRD”, one or two thirds may be left blank, and only one third may be reported, depending on which contamination type and runway condition codes that is reported. For example 25// , /15/15

Item G — Condition description for each third

Insert any of the condition description for each runway third separated by an oblique stroke

WET ICE
WATER ON TOP OF COMPACTED SNOW
DRY SNOW
DRY SNOW ON TOP OF ICE
WET SNOW ON TOP OF ICE
ICE
SLUSH
STANDING WATER
COMPACTED SNOW
WET SNOW
DRY SNOW ON TOP OF COMPACTED SNOW
WET SNOW ON TOP OF COMPACTED SNOW
FROST

DRY shall be reported when there is no contaminant.

Item H — Width of RWY to which the RWYCCs apply if less than published width, insert width in metres.

3. *Situational awareness section*

1) Elements in the situational awareness section shall end with a full stop.

2) Elements in the situational awareness section for which no information exists, or where the conditional circumstances for publication is not fulfilled, shall be left out completely.

Item I — Reduced runway length

If the runway length available is reduced due to reported conditions, insert available length in meters.([nn]nn)

Item J — Drifting snow on the runway

If snow is drifting on the runway, report “DRIFTING SNOW”

Item K — Loose sand on the runway

If loose sand is present on the runway, insert lowest runway designator and with a space "LOOSE SAND", for example (RWY nn[L] *or* nn[C] *or* nn[R] LOOSE SAND).

Item L — Chemical treatment on RWY

If chemical treatment has been applied, insert the lowest runway designator and with a space "CHEMICALLY TREATED" (RWY nn[L] *or* nn[C] *or* nn[R] CHEMICALLY TREATED).

Item M — Snowbanks on the runway

If critical snowbanks are present on the runway, insert the runway designator and with a space "SNOWBANK" and with a space left "L" or right "R" or both sides "LR", followed by the distance in metres from centreline separated by a space FM CL (RWY nn[L] *or* nn[C] *or* nn[R] SNOWBANK Lnn *or* Rnn *or* LRnn FM CL).

Item N — Snowbanks on the taxiway

If critical snow banks are present on a taxiway, insert the taxiway designator and with a space "SNOW BANK" and with a space left "L" or right "R" or both sides "LR", followed by the distance in metres from centreline separated by a space FM CL (TWY [nn]n) SNOWBANK Lnn *or* Rnn *or* LRnn FM CL).

Item O — Snowbanks adjacent to the runway

If snow banks are present penetrating the height profile in the aerodrome snow plan, insert lowest runway designator and "ADJ SNOWBANKS" (RWY nn[L] *or* nn[C] *or* nn[R] ADJ SNOWBANKS.)

Item P — Taxiway conditions

If taxiway conditions are slippery or poor insert taxiway designator followed by a space "POOR". ( TWY [nn]n POOR.)

Item R — Apron conditions

If apron conditions are slippery or poor insert taxiway designator followed by a space "POOR" ( APRON [nnnn] POOR.)

Item S — State approved and published use of measured friction coefficient

According to a standard set or agreed by the State.

Item T — Plain language remarks

Plain language text, insert characters in accordance with aeronautical fixed services provisions.

| *Origin* | *Rationale* |
|---|---|
| FTF, AP3, AIS-AIMSG/10 | Consequential changes required to implement the changes to runway surface condition reporting as detailed in Annex 14 and the PANS-Aerodromes |

| | |
|---|---|
| | (Doc 9981). Changes to this section are necessary to elaborate on the instructions given with respect to the content and format of the new runway condition reporting format. |

**INITIAL PROPOSAL 6**

**EXAMPLE OF COMPLETED SNOWTAM FORMAT**

~~GG EHAMZQZX EDDFZQZX EKCHZQZX~~
~~070645 LSZHYNYX~~
~~SWLS0149 LSZH 11070700~~
~~(SNOWTAM 0149~~
~~A) LSZH~~
~~B) 11070620 C) 02 D)…P)~~
~~B) 11070600 C) 09 D)…P)~~
~~B) 11070700 C) 12 D)…P)~~
~~R) NO S) 11070920~~
~~T) DEICING~~

Example SNOWTAM 1

ENZH 02170055 09L 5/5/5 100/100/100 // WET/WET/WET

Example SNOWTAM 2

ENZH 02170055 09L 5/5/5 100/100/100 // WET/WET/WET
ENZH 02170135 09R 5/4/3 100/50/75 /06/06 WET/SLUSH/SLUSH

Example SNOWTAM 3

ENZH 02170055 09L 5/5/5 100/100/100 // WET/WET/WET
ENZH 02170135 09R 5/4/3 100/50/75 /06/06 WET/SLUSH/SLUSH
ENZH 02170225 09C 3/2/1 75/100/100 06/12/12 SLUSH/WET SNOW/WET SNOW
RWY 09L SNOWBANK R20 FM CL. RWY 09R ADJ SNOWBANKS. TWY B POOR. APRON NORTH POOR

Example SNOWTAM 4

ENZH 02170345 09L 5/5/5 100/100/100 // WET/WET/WET
ENZH 02170134 09R 5/4/3 100/50/75 /06/06 WET/SLUSH/SLUSH
ENZH 02170225 09C 3/2/1 75/100/100 06/12/12 SLUSH/WET SNOW/WET SNOW 35
DRIFTING SNOW. RWY 09L LOOSE SAND. RWY 09R CHEMICALLY TREATED. RWY 09C CHEMICALLY TREATED.

*Note.— See the* Aeronautical Information Services Manual *(Doc 8126) for additional SNOWTAM examples incorporating different runway conditions.*

~~**Definitions of the various types of snow**~~

~~***Slush***. Water-saturated snow which with a heel-and-toe slap-down motion against the ground will be displaced with a splatter; specific gravity: 0.5 up to 0.8.~~

~~*Note. — Combinations of ice, snow and/or standing water may, especially when rain, rain and snow, or snow is falling, produce substances with specific gravities in excess of 0.8. These substances, due to their high water/ice content, will have a transparent rather than a cloudy appearance and, at the higher specific gravities, will be readily distinguishable from slush.*~~

~~***Snow (on the ground)***.~~

~~a) *Dry snow*. Snow which can be blown if loose or, if compacted by hand, will fall apart again upon release; specific gravity: up to but not including 0.35.~~

~~b) *Wet snow*. Snow which, if compacted by hand, will stick together and tend to or form a snowball; specific gravity: 0.35 up to but not including 0.5.~~

~~c) *Compacted snow*. Snow which has been compressed into a solid mass that resists further compression and will hold together or break up into lumps if picked up; specific gravity: 0.5 and over.~~

| *Origin* | *Rationale* |
|---|---|
| FTF, AP3, AIS-AIMSG | Consequential changes required to implement the changes to runway surface condition reporting as detailed in Annex 14 and the PANS-Aerodromes (Doc 9981). Changes to this section are necessary to give examples showing the content and format of the new runway condition reporting format. |

— — — — — — — —

**ATTACHMENT I** to State letter AN 4/1.1.55-15/30

**PROPOSED AMENDMENT TO THE PANS-ATM**

## NOTES ON THE PRESENTATION OF THE AMENDMENT

The text of the amendment is arranged to show deleted text with a line through it and new text highlighted with grey shading, as shown below:

| | |
|---|---|
| ~~Text to be deleted is shown with a line through it.~~ | Text to be deleted |
| New text to be inserted is highlighted with grey shading. | New text to be inserted |
| ~~Text to be deleted is shown with a line through it~~ followed by the replacement text which is highlighted with grey shading. | New text to replace existing text |

**TEXT OF PROPOSED AMENDMENT TO THE**

***PROCEDURES FOR AIR NAVIGATION SERVICES — AIR TRAFFIC MANAGEMENT* (PANS-ATM, DOC 4444)**

. . .

**INITIAL PROPOSAL 1**

## Chapter 1
## DEFINITIONS

. . .

***Situation display***. An electronic display depicting the position and movement of aircraft and other information as required.

~~***Slush***. Water-saturated snow which with a heel-and-toe slap-down motion against the ground will be displaced with a splatter; specific gravity: 0.5 up to 0.8.~~

~~Note. — Combinations of ice, snow and/or standing water may, especially when rain, rain and snow, or snow is falling, produce substances with specific gravities in excess of 0.8. These substances, due to their high water/ice content, will have a transparent rather than a cloudy appearance and, at the higher specific gravities, will be readily distinguishable from slush.~~

~~***Snow (on the ground)***.~~

~~a) *Dry snow*. Snow which can be blown if loose or, if compacted by hand, will fall apart upon release; specific gravity: up to but not including 0.35.~~

~~b) *Wet snow*. Snow which, if compacted by hand, will stick together and tend to or form a snowball; specific gravity: 0.35 up to but not including 0.5.~~

~~c) *Compacted snow*. Snow which has been compressed into a solid mass that resists further compression and will hold together or break up into lumps if picked up; specific gravity: 0.5 and over.~~

***Special VFR flight***. A VFR flight cleared by air traffic control to operate within a control zone in meteorological conditions below VMC.

| *Origin* | *Rationale* |
|---|---|
| FTF, AP3 | Consequential amendment of *Procedures for Air Navigation Services — Air Traffic Management* (PANS-ATM, Doc 4444) to ensure that there are no differences in definitions and ensure that Annex 14 — *Aerodromes* is the single definitive source of surface condition related definitions. |

. . .

**INITIAL PROPOSAL 2**

## Chapter 4
## GENERAL PROVISIONS FOR AIR TRAFFIC SERVICES

. . .

### 4.12 REPORTING OF OPERATIONAL AND METEOROLOGICAL INFORMATION

. . .

#### 4.12.3 Contents of special air-reports

4.12.3.1 Special air-reports shall be made by all aircraft whenever the following conditions are encountered or observed:

a) moderate or severe turbulence; or

b) moderate or severe icing; or

c) severe mountain wave; or

d) thunderstorms, without hail that are obscured, embedded, widespread or in squall lines; or

e) thunderstorms, with hail that are obscured, embedded, widespread or in squall lines; or

f) heavy duststorm or heavy sandstorm; or

g) volcanic ash cloud; or

h) pre-eruption volcanic activity or a volcanic eruption~~.~~; or

i) runway braking action encountered is not as good as reported.

*Note.— Pre-eruption volcanic activity in this context means unusual and/or increasing volcanic activity which could presage a volcanic eruption.*

*Editorial Note.— Renumber* subsequent bullets accordingly.

| *Origin* | *Rationale* |
|---|---|
| Aerodromes Panel Friction Task Force – Implementation of the Runway Condition Report, OPSP/WG/1 | The timely reporting of accurate braking action by pilots to ATC is considered essential to safe runway operations. This consequential amendment ensures alignment with the Annex 6 requirement to report braking action. |

. . .

**INITIAL PROPOSAL 3**

### 4.12.6 Forwarding of meteorological information

. . .

4.12.6.3 When receiving special air-reports by voice communications, air traffic services units shall forward them without delay to their associated meteorological watch offices, with the exception of conditions applying to runway braking action encountered.

### 4.12.7 Forwarding of braking action information

When receiving special air-reports by voice communications concerning braking action encountered that is not as good as that reported, air traffic service units shall forward them without delay to the appropriate aerodrome operator.

| *Origin* | *Rationale* |
|---|---|
| Aerodromes Panel Friction Task Force – Implementation of the Runway Condition Report, OPSP/WG/1 | The timely reporting of accurate braking action by pilots to ATC is considered essential to safe runway operations, however as braking action is not meteorological information, it does not need to be passed to MET offices. The requirement to pass special air-reports concerning braking action to the aerodrome operator facilitates the accuracy of the aerodrome conditions report filed by the aerodrome operator. |

. . .

**INITIAL PROPOSAL 4**

## Chapter 7
## PROCEDURES FOR AERODROME CONTROL SERVICE

. . .

### 7.5 ESSENTIAL INFORMATION ON AERODROME CONDITIONS

. . .

7.5.2 Essential information on aerodrome conditions shall include information relating to the following:

a) construction or maintenance work on, or immediately adjacent to the movement area;

b) rough or broken surfaces on a runway, a taxiway or an apron, whether marked or not;

c) water, snow, slush ~~or~~, ice or frost on a runway, a taxiway or an apron;

d) ~~water on a runway, a taxiway or an apron~~ anti-icing or de-icing liquid chemicals or other contaminant on a runway, taxiway or apron;

e) snow banks or drifts adjacent to a runway, a taxiway or an apron;

f) other temporary hazards, including parked aircraft and birds on the ground or in the air;

g) failure or irregular operation of part or all of the aerodrome lighting system;

h) any other pertinent information.

*Note.— Up-to-date information on the conditions on aprons may not always be available to the aerodrome control tower. The responsibility of the aerodrome control tower in relation to aprons is, with respect to the provisions of 7.5.1 and 7.5.2, limited to the transmission to aircraft of the information which is provided to it by the authority responsible for the aprons.*

| *Origin* | *Rationale* |
|---|---|
| Aerodromes Panel Friction Task Force – Implementation of the Runway Condition Report, OPSP/WG/1 | This amendment updates the aerodrome conditions list, aligning the runway conditions factors with Annex 14 changes stemming from the Friction Task Force work on braking action.<br><br>Editorial amendments are also included. |

. . .

**INITIAL PROPOSAL 5**

## Chapter 11
## AIR TRAFFIC SERVICES MESSAGES

. . .

### 11.4.3.4 MESSAGES CONTAINING INFORMATION ON AERODROME CONDITIONS

*Note.— Provisions regarding the issuance of information on aerodrome conditions are contained in Chapter 7, 7.5.*

11.4.3.4.1 Whenever information is provided on aerodrome conditions, this shall be done in a clear and concise manner so as to facilitate appreciation by the pilot of the situation described. It shall be issued whenever deemed necessary by the controller on duty in the interest of safety, or when requested by an aircraft. If the information is provided on the initiative of the controller, it shall be transmitted to each aircraft concerned in sufficient time to enable the pilot to make proper use of the information.

11.4.3.4.2 ~~Information that water is present on a runway shall be transmitted to each aircraft concerned, on the initiative of the controller, using the following terms~~ Whenever information is provided concerning runway surface conditions that may adversely affect aircraft braking action, the following terms shall be used, as necessary:

~~DAMP — the surface shows a change of colour due to moisture.~~

~~WET — the surface is soaked but there is no standing water.~~

~~STANDING WATER — for aeroplane performance purposes, a runway where more than 25 per cent of the runway surface area (whether in isolated areas or not) within the required length and width being used is covered by water more than 3 mm deep.~~

DRY

WET ICE

WATER ON TOP OF COMPACTED SNOW

DRY SNOW

DRY SNOW ON TOP OF ICE.

WET SNOW ON TOP OF ICE.

ICE

SLUSH

STANDING WATER

COMPACTED SNOW

WET SNOW

DRY SNOW ON TOP OF COMPACTED SNOW.

WET SNOW ON TOP OF COMPACTED SNOW.

WET

FROST

11.4.3.4.3 Appropriate ATS units shall have available for transmission to aircraft, upon request, the Runway Condition Report information. This shall be passed to aircraft in the order of the direction of landing or take-off.

| *Origin* | *Rationale* |
|---|---|
| Aerodromes Panel Friction Task Force – Implementation of the Runway Condition Report, OPSP/WG/1 | This consequential amendment ensures alignment with the Annex 14 amendment stemming from the Friction Task Force work on braking action. |

. . .

**INITIAL PROPOSAL 6**

## Chapter 12
## PHRASEOLOGIES

. . .

### 12.3 ATC PHRASEOLOGIES

#### 12.3.1 General

. . .

| *Circumstances* | *Phraseologies* |
|---|---|
| . . . | |
| 12.3.1.11 AERODROME INFORMATION<br><br>*Note 1.— See 11.4.3.4.3 for requirements for passing RCR to pilots.*<br><br>*Note 2.— This information is provided for runway thirds or the full runway, as applicable.* | ~~a) [*(location)*] RUNWAY SURFACE CONDITION RUNWAY *(number) (condition)*~~<br>a) [*(location)*] RUNWAY *(number)* SURFACE CONDITION [CODE *(three digit number*)]<br><br>*followed as necessary by:*<br><br>1. ISSUED AT (*date and time UTC);*<br>2. DRY, *or* WET ICE, *or* WATER ON TOP OF COMPACTED SNOW, *or* DRY SNOW, *or* DRY SNOW ON TOP OF ICE, *or* WET SNOW ON TOP OF ICE, *or* ICE, *or* SLUSH, *or* STANDING WATER, *or* COMPACTED SNOW, *or* WET SNOW, *or* DRY SNOW ON TOP OF COMPACTED SNOW, *or* WET SNOW ON TOP OF COMPACTED SNOW, *or* WET, *or* FROST;<br>3. DEPTH (*(depth of deposit)* MILLIMETRES *or* NOT REPORTED);<br>4. COVERAGE (*(number)* PERCENT *or* NOT REPORTED);<br>5. ESTIMATED SURFACE FRICTION (GOOD, *or* GOOD TO MEDIUM, *or* MEDIUM, *or* MEDIUM TO POOR, *or* POOR, or WORSE THAN POOR);<br>6. AVAILABLE WIDTH *(number)* METRES;<br>7. LENGTH REDUCED TO *(number)* METRES;<br>8. DRIFTING SNOW;<br>9. LOOSE SAND;<br>10. CHEMICALLY TREATED;<br>11. SNOWBANK *(number)* METRES [LEFT, *or* RIGHT *or* LEFT AND RIGHT] [OF *or* FROM] CENTRELINE; |

12. TAXIWAY *(identification of taxiway)* SNOWBANK *(number)* METRES [LEFT, *or* RIGHT *or* LEFT AND RIGHT] [OF *or* FROM] CENTRELINE;
13. ADJACENT SNOWBANKS;
14. TAXIWAY *(identification of taxiway)* POOR;
15. APRON *(identification of apron)* POOR;
16. *Plain language remarks*

b) . . .

e) CAUTION *(specify reasons)* RIGHT (*or* LEFT), (*or* BOTH SIDES) OF RUNWAY [*(number)*];

. . .

~~g) RUNWAY REPORT AT *(observation time)* RUNWAY *(number) (type of precipitant)* UP TO *(depth of deposit)* MILLIMETRES. ESTIMATED SURFACE FRICTION GOOD (*or* MEDIUM TO GOOD, *or* MEDIUM, *or* MEDIUM TO POOR, *or* POOR;~~

~~h~~ g) BRAKING ACTION REPORTED BY *(aircraft type)* AT *(time)* GOOD (*or* ~~MEDIUM to~~ GOOD TO MEDIUM, *or* MEDIUM, *or* MEDIUM ~~to~~ TO POOR, *or* POOR);

~~i~~ h) ~~RUNWAY (*or*~~ TAXIWAY~~)~~ *(~~number~~ identification of taxiway)* WET [*or* STANDING WATER, *or* SNOW REMOVED *(length and width as applicable)*, *or* TREATED, *or* COVERED WITH PATCHES OF DRY SNOW (*or* WET SNOW, *or* COMPACTED SNOW, *or* SLUSH, *or* FROZEN SLUSH, *or* ICE, *or* WET ICE, *or* ICE UNDERNEATH, *or* ICE AND SNOW, *or* SNOWDRIFTS, *or* FROZEN RUTS AND RIDGES)];

~~j~~ i) TOWER OBSERVES *(weather information)*;

~~k~~ j) PILOT REPORTS *(weather information)*.

| *Origin* | *Rationale* |
|---|---|
| Aerodromes Panel Friction Task Force – Implementation of the Runway Condition Report, OPSP/WG/1 | This amendment ensures that the implementation of the "runway condition assessment matrix (RCAM)" and "runway condition code (RWYCC)" concepts are supported by air-ground radiotelephony phraseologies which correlate with the use of the associated terms proposed in the context of Annex 14 and as further supported by the consequential use of those same terms in other documents.<br><br>A supporting amendment to Doc 9432, *Manual of Radiotelephony* will be completed in sufficient time to give clear guidance with respect to the runway condition report format transmission by RTF. |

**INITIAL PROPOSAL 7**

**Appendix 1**
**INSTRUCTIONS FOR AIR-REPORTING**
**BY VOICE COMMUNICATIONS**

. . .

**1. Reporting instructions**

**MODEL AIREP SPECIAL**

| | ITEM | PARAMETER | TRANSMIT IN TELEPHONY as appropriate |
|---|---|---|---|
| Section 3 | . . .<br>9 | Phenomenon encountered or observed,<br>prompting a special air-report:<br>• Moderate turbulence<br>• Severe turbulence<br>• Moderate icing<br>• Severe icing<br>• Severe mountainwave<br>• Thunderstorms without hail<br>• Thunderstorms with hail<br>• Heavy dust/sandstorm<br>• Volcanic ash cloud<br>• Pre-eruption volcanic activity or volcanic eruption<br><br>Runway braking action<br><br>• Good<br>• Good to Medium<br>• Medium<br>• Medium to Poor<br>• Poor<br>• Less than Poor | <br><br><br>TURBULENCE MODERATE<br>TURBULENCE SEVERE<br>ICING MODERATE<br>ICING SEVERE<br>MOUNTAINWAVE SEVERE<br>THUNDERSTORMS<br>THUNDERSTORMS WITH HAIL<br>DUSTSTORM *or* SANDSTORM HEAVY<br>VOLCANIC ASH CLOUD<br>PRE-ERUPTION VOLCANIC ACTIVITY *or* VOLCANIC ERUPTION<br><br><br><br>• GOOD<br>• GOOD TO MEDIUM<br>• MEDIUM<br>• MEDIUM TO POOR<br>• POOR<br>• LESS THAN POOR |

. . .

**Section 3**

**Item 9** — PHENOMENON PROMPTING A SPECIAL AIR-REPORT. Report one of the following phenomena encountered or observed:

. . .

- volcanic ash cloud as “VOLCANIC ASH CLOUD”
- pre-eruption volcanic activity or a volcanic eruption as “PRE-ERUPTION VOLCANIC ACTIVITY or VOLCANIC ERUPTION”

The following specification applies:

Pre-eruption volcanic activity in this context means unusual and/or increasing volcanic activity which could presage a volcanic eruption.

*Note.— In case of volcanic ash cloud, pre-eruption volcanic activity or volcanic eruption, in accordance with Chapter 4, 4.12.3, a post-flight report shall also be made on the special air-report of volcanic activity form (Model VAR).*

- Good to medium braking action as "BRAKING ACTION GOOD TO MEDIUM"
  Medium braking action as "BRAKING ACTION MEDIUM"
  Medium to poor braking action as "BRAKING ACTION POOR"
  Poor braking action as "BRAKING ACTION POOR"
  Less than poor braking action as "BRAKING ACTION LESS THAN POOR"

The following specifications apply:

Good — Braking deceleration is normal for the wheel braking effort applied and directional control is normal.

Good to medium — Braking deceleration or directional control is between Good and Medium.

Medium — Braking deceleration is noticeably reduced for the wheel braking effort applied or directional control is noticeably reduced.

Medium to poor — Braking deceleration or directional control is between Medium and Poor.

Poor — Braking deceleration is significantly reduced for the wheel braking effort applied or directional control is significantly reduced.

Less than poor — Braking deceleration is minimal to non-existent for the wheel braking effort applied or directional control is uncertain.

2.2 Information recorded on the volcanic activity reporting form (Model VAR) is not for transmission by RTF but, on arrival at an aerodrome, is to be delivered without delay by the operator or a flight crew member to the aerodrome meteorological office. If such an office is not easily accessible, the completed form shall be delivered in accordance with local arrangements made between the meteorological and ATS authorities and the operator.

| *Origin* | *Rationale* |
|---|---|
| Aerodromes Panel Friction Task Force – Implementation of the Runway Condition Report, OPSP/WG/1 | This amendment introduces the standard braking action phraseologies to the Model AIREP Special in Appendix 1, and provides definition for the phraseologies in Appendix 1, Section 3. |

— — — — — — — —

**ATTACHMENT J** to State letter AN 4/1.1.55-15/30

**RESPONSE FORM TO BE COMPLETED AND RETURNED TO ICAO TOGETHER WITH ANY COMMENTS YOU MAY HAVE ON THE PROPOSED AMENDMENTS**

To: The Secretary General
International Civil Aviation Organization
999 Robert-Bourassa Boulevard
Montréal, Quebec
Canada, H3C 5H7

(State) _____

Please make a checkmark (✓) against one option for each amendment. If you choose options "agreement with comments" or "disagreement with comments", **please provide your comments on separate sheets**.

| | *Agreement without comments* | *Agreement with comments** | *Disagreement without comments* | *Disagreement with comments* | *No position* |
|---|---|---|---|---|---|
| Amendment to Annex 14 — *Aerodromes*, Volume I — *Aerodrome Design and Operations* (Attachment B refers) | | | | | |
| Amendment to PANS-Aerodromes (Doc 9981), *Procedures for Air Navigation Services — Aerodromes* (Doc 9981) (Attachment C refers) | | | | | |
| Amendment to Annex 3 — *Meteorological Service for International Air Navigation* (Attachment D refers) | | | | | |
| Amendment to Annex 6 — *Operation of Aircraft*, Part I — *International Commercial Air Transport — Aeroplanes* (Attachment E refers) | | | | | |
| Amendment to Annex 6 — *Operation of Aircraft*, Part II — *International General Aviation — Aeroplanes* (Attachment F refers) | | | | | |
| Amendment to Annex 8 — *Airworthiness of Aircraft* (Attachment G refers) | | | | | |
| Amendment to Annex 15 — *Aeronautical Information Services* (Attachment H refers) | | | | | |
| Amendment to PANS-ATM (Doc 4444), *Procedures for Air Navigation Services — Air Traffic Management* (Attachment I refers) | | | | | |

*"Agreement with comments" indicates that your State or organization agrees with the intent and overall thrust of the amendment proposal; the comments themselves may include, as necessary, your reservations concerning certain parts of the proposal and/or offer an alternative proposal in this regard.

Signature: _____ Date: _____

— END —