Progress on the development of the ICAO CO_2 Standard

Neil Dickson,

ICAO, Environment Branch

Development of the CO_2 Standard

- **The aircraft CO_2 Standard will result in a new Annex 16 Vol. III**
- **Two phases in the approach:**
  - **<u>Phase 1 has been completed</u>**
    - Development of CO_2 Certification Requirement, including a CO_2 metric system and procedures.
  - **<u>Phase 2 is underway</u>**
    - CO_2 Standard setting process (stringency levels, technology responses, cost effectiveness assessments and interdependencies).

The CAEP/9 meeting agreed on an Annex 16, Vol. III certification requirement.

This presentation…

- Principles of the CO_2 Standard development.
- Recent important decisions:
  - CO_2 metric system;
  - Certification requirement.
- Next steps and development timescales.

CO_2 Standard Framework

Aircraft CO_2 Standard

Certification requirement

[Including: Metric system, procedures, measurement methodology, applicability]

+

Regulatory limit

- Technology Standard similar to current Noise and LAQ Standards.
- Aircraft level Standard similar to Noise Standard.

High Level Principles

- An aircraft CO_2 Standard should focus on reducing CO_2 emissions through integration of fuel efficiency technologies into aeroplane type designs.
- To design a metric system which could permit transport capability neutrality at a system level when a stringency is applied based on this metric system.
- Aim for equitable recognition of fuel efficiency improvement technologies in an aircraft type design.

Key Criteria

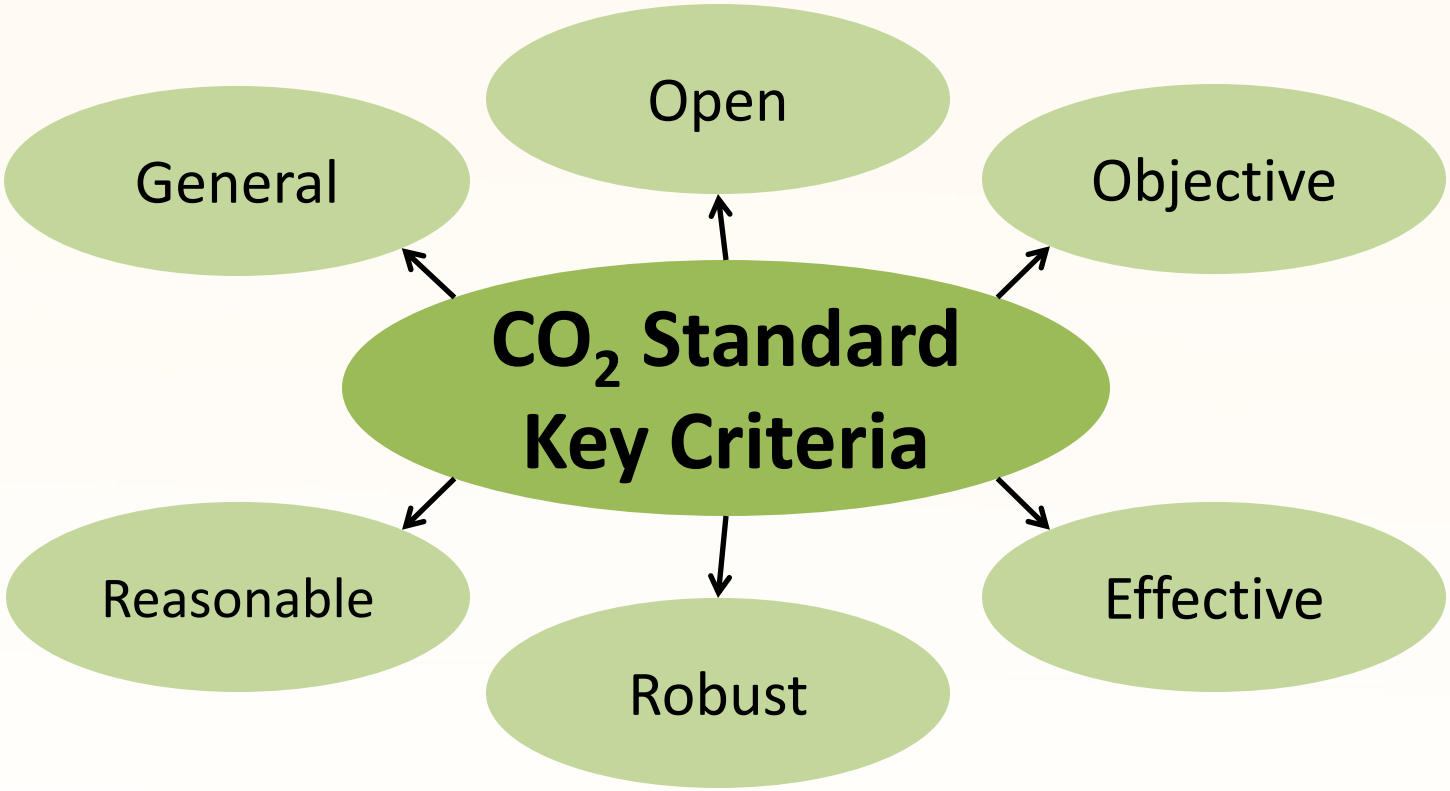

Selection of a CO_2 metric system

- On 11 July 2012, at the CAEP Steering Group meeting in Saint Petersburg, an important step was made toward establishing the worldwide Aircraft CO_2 Emissions Standard.
- CAEP reached a unanimous agreement on a CO_2 metric system.
- The CO_2 metric system is a measure of aircraft fuel burn performance and therefore represents the CO_2 emissions produced by an aircraft.

The CO_2 metric system will underpin the ICAO Aircraft CO_2 Emissions Standard

The principle of the CO_2 metric system

- The 'metric system' takes the form of:
  - A metric;
  - A correlating parameter; and
  - Certification test point(s).
- **The Metric is a function of:**
  - Cruise point fuel burn performance and aeroplane size.
- **The Correlating parameter:**
  - Maximum aeroplane mass.
- **The Certification test points:**
  - Three certification test points, each based on a fraction of aeroplane mass.

Certification procedures

- Developed using a group of certification experts from States and international organisations.
- Resulting in the certification test and measurement criteria for determination and implementation of the CO_2 metric system.
- Development of procedures to measure the elements of the CO_2 metric system:
  - measurement of all parameters;
  - correction of measured data to reference conditions.

Applicability and implementation

- The CO_2 Standard will be applicable at an aeroplane level.
- The CO_2 Standard will be applicable to new aeroplane types.
  - Discussions continue over including in-production types.
- The CO_2 Standard will be applicable to subsonic jet and propeller driven aeroplanes.
- Discussions over the applicability dates for the CO_2 Standard are continuing.

CAEP approved Annex 16, Vol. III certification requirement

- The mature Annex 16, Vol. III certification requirement, which is based on the previously agreed CO_2 metric system, was approved by CAEP, including:
  - Part I - Definitions and symbols;
  - Part II - Certification standard for aeroplane CO_2 emissions based on the consumption of fuel;
  - Appendix 1 – Determination of aeroplane CO_2 emissions evaluation metric;
  - Appendix 2 – Calculating the parameter for aeroplane size.

Taking stock of progress

- The CAEP agreed to take stock of the agreed CO_2 metric system and certification requirement before the final Standard was set.
- The CAEP agreed to publish the agreed CO_2 Standard certification requirement as an ICAO Circular for information-only, as soon as possible.

Remaining work and timescale

- To finalise the CO_2 Standard the following issues remain:
  - definition of a no-change criteria;
  - applicability requirements;
  - regulatory limit;
  - applicability date for limit.
- The CAEP assessed a comprehensive work plan and agreed that the CO_2 Standard technical work would be finalised in late-2015.

Thank you

For more information on the CO_2 Standard developments:

http://www.icao.int/Newsroom/Pages/new-progress-on-aircraft-CO2-standard.aspx

BACKUP SLIDES ON THE CO_2 METRIC SYSTEM

CAEP agreed CO_2 metric system

Destination Green

The Metric | The Correlating Parameter

(1/SAR) / Б vs. MTOM

Cruise point fuel burn performance (1/SAR)

Specific Air Range (SAR) is the distance an aircraft can fly for a given mass of fuel burned, measured at optimum conditions (speed, altitude, trim etc.).

Aeroplane size (Б)

Б is a function of Reference Geometry Factor (RGF).

RGF is a measure of fuselage size

Aeroplane mass (MTOW)

MTOM is the certified Maximum Take-Off Mass for the aeroplane type.

Certification Test Points: The CO_2 metric System will be evaluated at three aircraft gross masses, where each is represented by a fraction of MTOM.

The Metric – Details on Specific Air Range (1/SAR)

- 1/SAR is a single point steady state instantaneous measure of fuel consumption per unit distance in cruise.
- **1/SAR** = **kg of fuel/km flown**
- Accounts for the main aeroplane design elements:
  - Propulsive efficiency
  - Aerodynamic efficiency
  - Aircraft weight changes

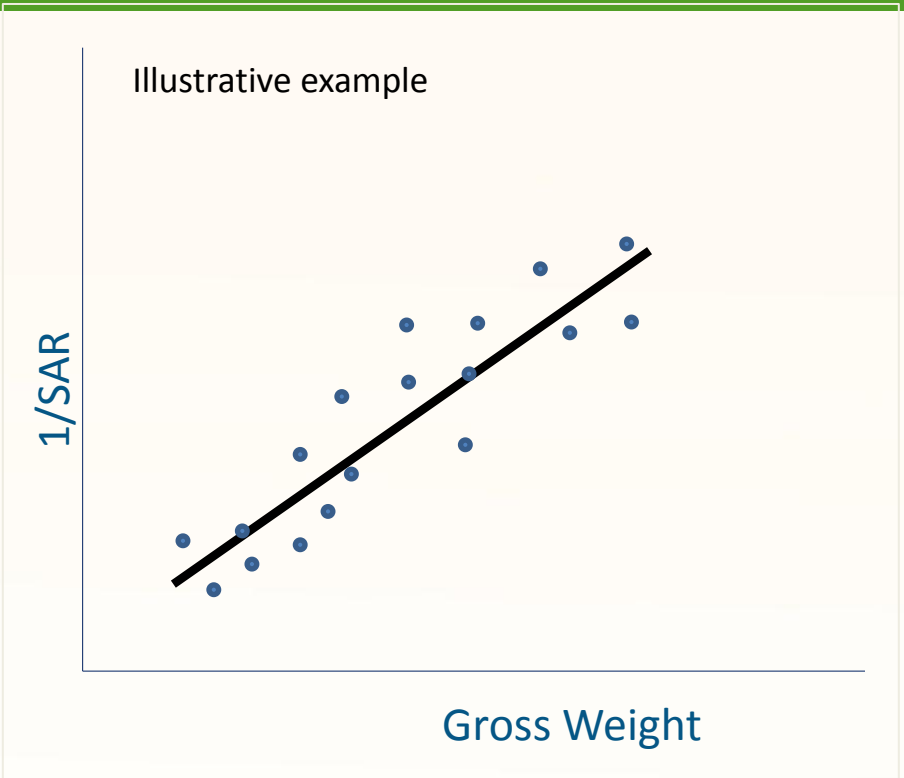

- 1/SAR varies primarily with aeroplane Gross Weight (GW).

The Metric – Details on Specific Air Range (1/SAR)

- 1/SAR is measured at three certification test points based on GW:
  - High GW = 0.92 * MTOM
  - Mid GW = Average of High GW and Low GW
  - Low GW = (0.45 × MTOM) + (0.63 × ($MTOM^{0.924}$))

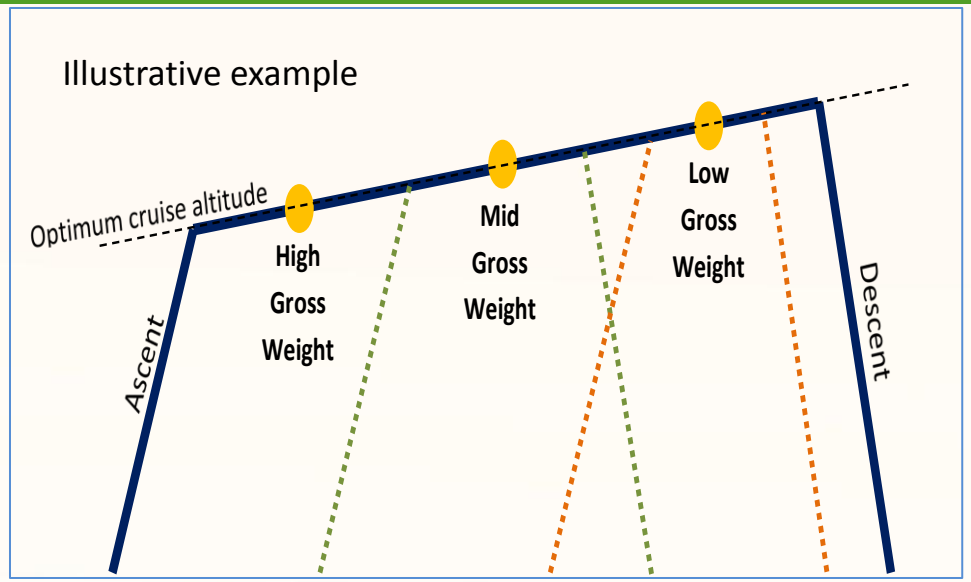

- Each of these certification test points represents an aircraft cruise GW seen regularly in service.
  - The objective is to make the evaluation of fuel burn performance more relevant to day-to-day aircraft operations.
- The certification test points will be equally weighted to give a single metric value.

The Metric – Details on Reference Geometric Factor (RGF)

- The CO_2 metric system has been designed to be transport capability neutral, meaning:
  - In a transport capability neutral metric system aircraft types with diverse transport capabilities, but similar levels of fuel efficiency technology/design, have similar margins to the limit line.
- To achieve this (1/SAR) is augmented with $RGF^{0.24}$.
- RGF is a measure of fuselage size.
- Accounts for instances when changes in aircraft size are not reflected by weight changes.
  - e.g. when an aircraft is a stretched version of an existing aircraft design.

The Metric – Details on Reference Geometric Factor (RGF)

- **Boundaries of the Reference Geometric Factor (cross-sectional view)**

NOTIONAL EXAMPLES

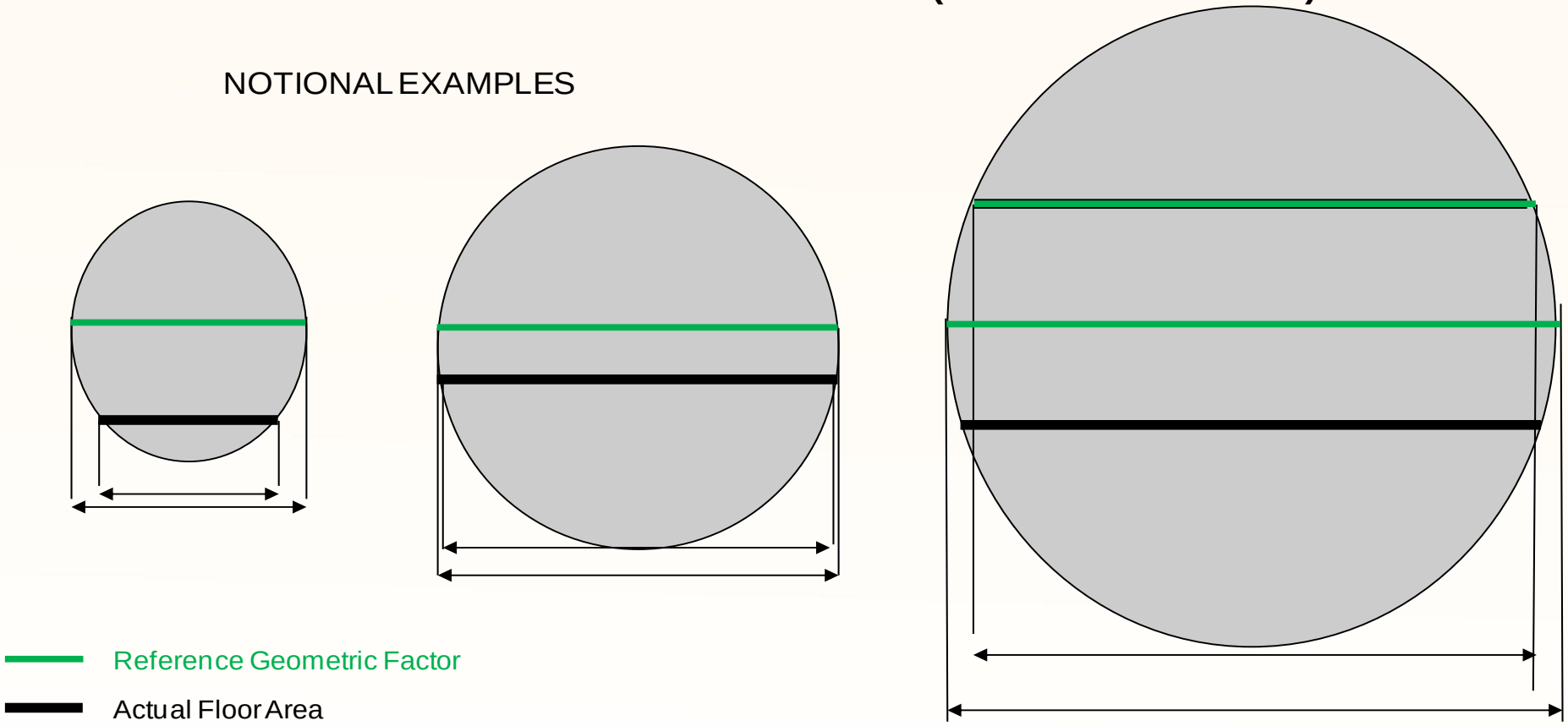

The Metric – Details on Reference Geometric Factor (RGF)

- **Boundaries of the Reference Geometric Factor (longitudinal view)**

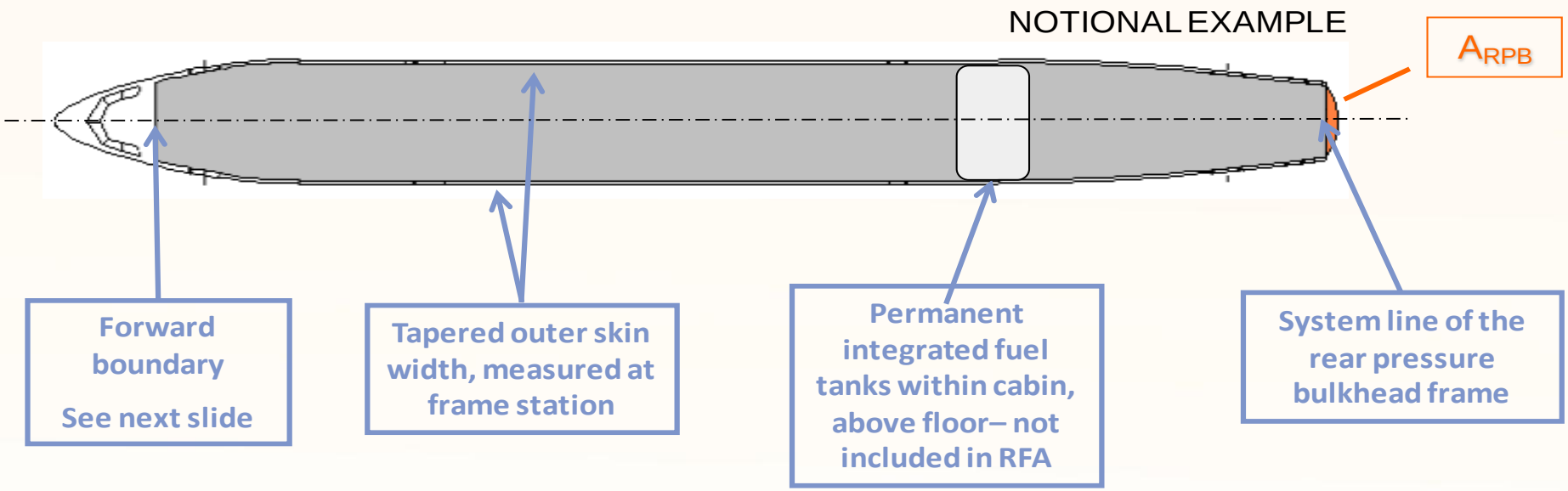

Notes:

- Included
  - Aisles, assist space, passage ways, and stairwells
- Excluded
  - Rear Pressure Bulkhead dome
  - Crew rest or work areas which are not on the main deck or upper deck (ie 'loft' or underfloor crew areas)
  - Permanent integrated fuel tanks within cabin, above floor

Correlating Parameter - Details on Maximum Take-Off Weight (MTOW)

- In many transport system metric systems, the correlating parameter is a measure of capability or capacity.
- This is not always the approach taken with ICAO environmental Standards.
  - The ICAO LAQ Standard uses engine Overall Pressure Ratio (OPR) to allow for other effects.
- In the CO_2 metric system, MTOW is used to represent the design of an aircraft type, accounting for the majority of features which allow an aircraft type to meet market demand.
  - MTOW is a certified value.

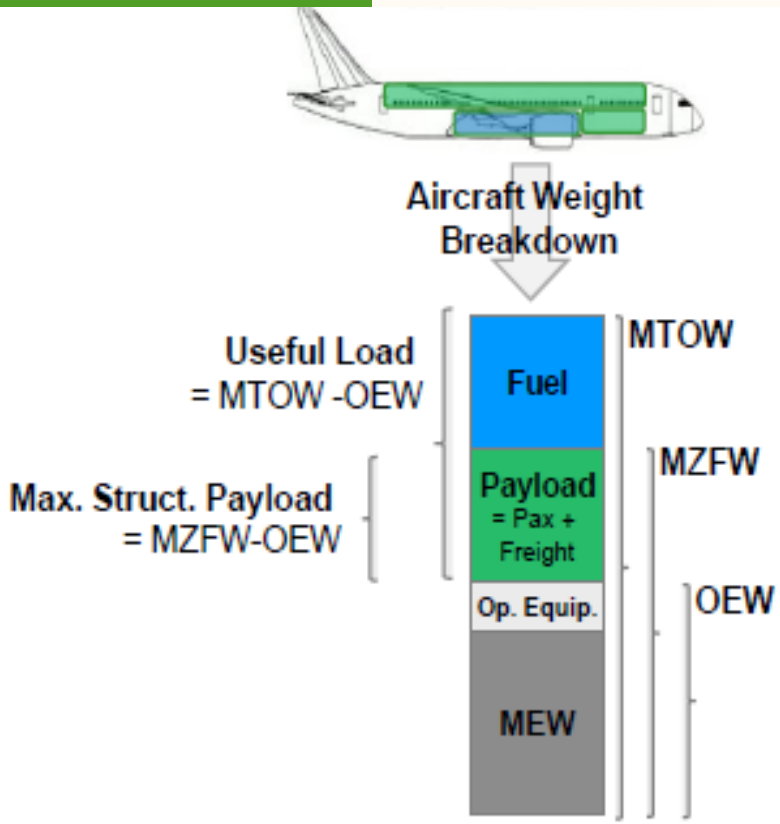

MTOW: Maximum Take-Off Weight,
MZFW: Maximum Zero Fuel Weight
OEW: Operating Empty Weight,
MEW: Manufacturer Empty Weight

CAEP agreed CO_2 metric system

$(1/SAR) / RGF^{0.24}$ vs. MTOW

Evaluated at three certification test points:

High GW = 0.92 * MTOW

Mid GW = Average of High GW and Low GW

Low GW = $(0.45 \times MTOW) + (0.63 \times (MTOW^{0.924})$

The three certification points will be equally weighted to derive a single metric system value.

Summary of the CO_2 metric system

$(1/SAR) / RGF^{0.24}$ vs. MTOW

Evaluated at three certification test points:

High GW = 0.92 * MTOW

Mid GW = Average of High GW and Low GW

Low GW = $(0.45 \times MTOW) + (0.63 \times (MTOW^{0.924})$

The three certification points will be equally weighted to derive a single metric system value.

- The metric system aims to:
  - focus on reducing CO_2 emissions through integration of fuel efficiency technologies into aeroplane type designs;
  - equitably reward fuel efficiency improvement technologies in an aircraft type design.
  - be transport capability neutral;